SANYO

Service Manual

Colour Video Cassette Recorder

VHR-D4600 Series
VHR-D4610 Series

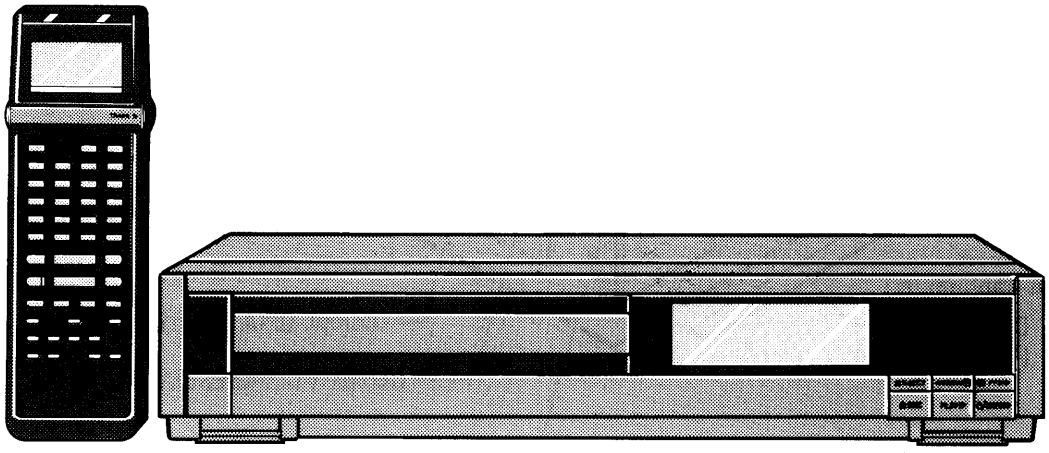

VHR-D4600G

VHS HQ DIGITAL

Table of Contents

1. LOCATIONS OF MAIN BOARDS. 1
2. ELECTRICAL ADJUSTMENT
2-1. PREPARATION 2
2-2. SERVO CIRCUIT ADJUSTMENT 2
2-3. VIDEO CIRCUIT ADJUSTMENT 3
2-4. VIDEO DIGITAL PROCESS CIRCUIT ADJUSTMENT. 5
2-5. AUDIO CIRCUIT ADJUSTMENT 11
2-6. IR SOUND TRANSMITTER CIRCUIT. 12
2-7. IR SOUND RECEIVER CIRCUIT 13
2-8. TUNER IF CIRCUIT ADJUSTMENT. 14
2-9. TEST POINT & ADJUSTMENT LOCATIONS. 14
2-10. TEST POINT FOR TAPE PATH ADJUSTMENT 18

1. LOCATIONS OF MAIN BOARDS

Compl. = Complete

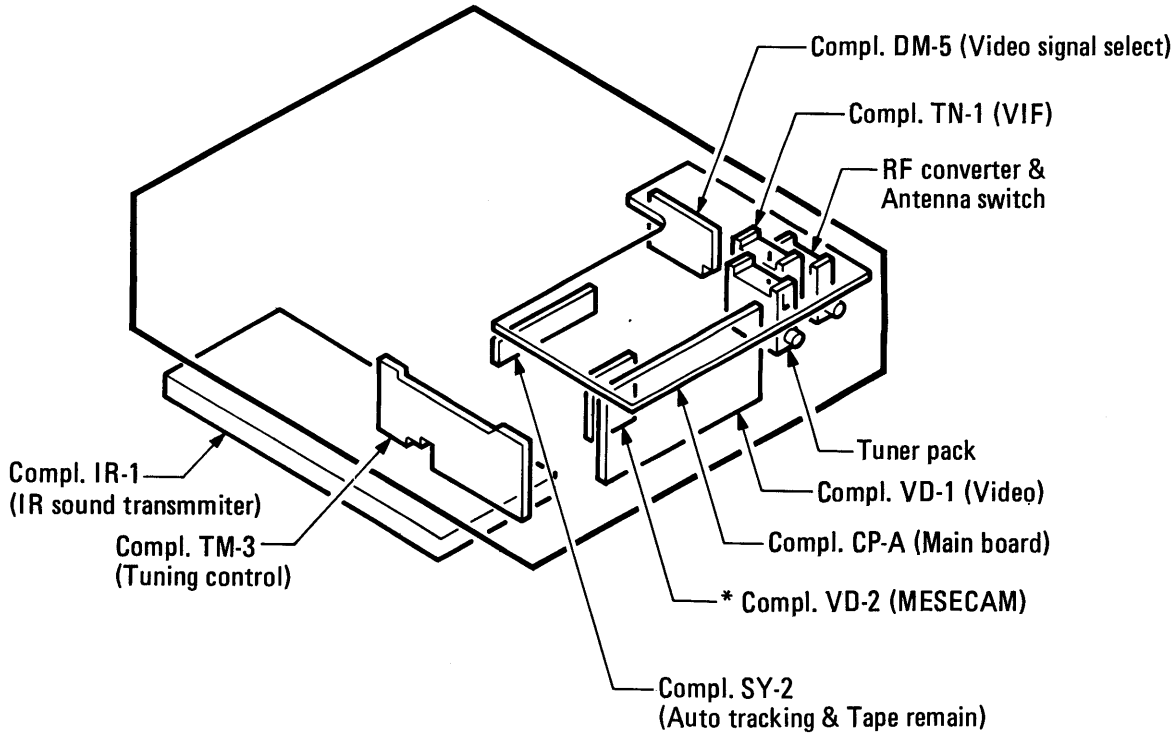

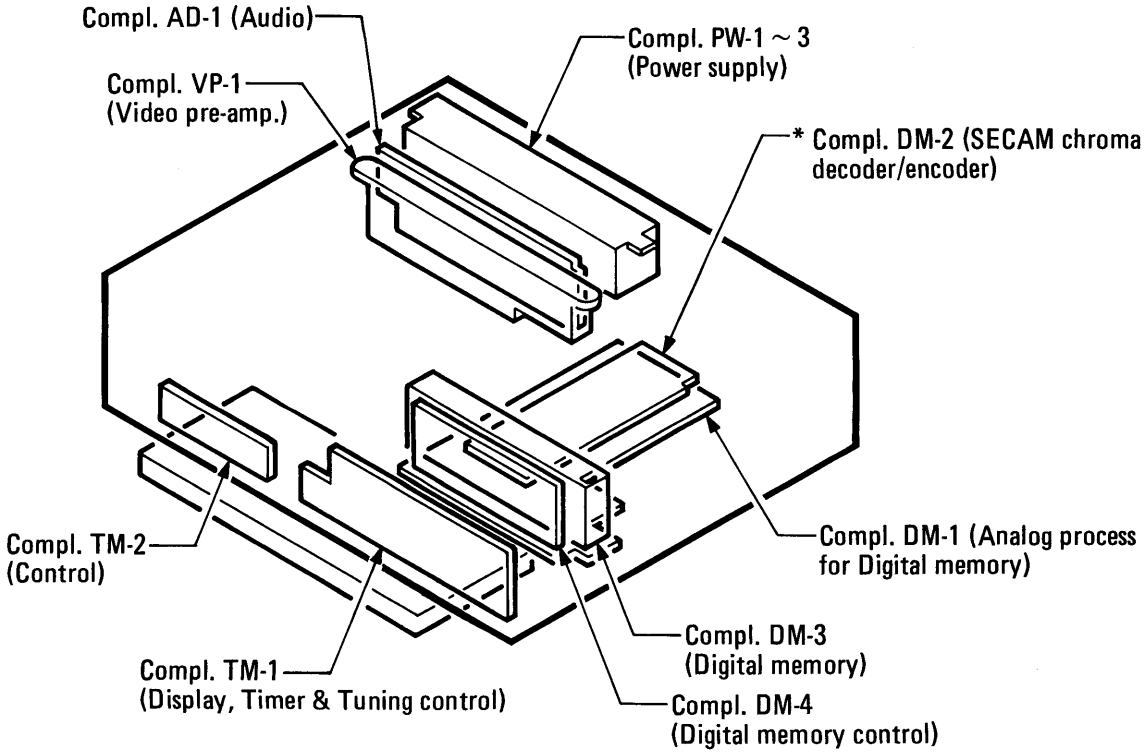

* This information apply to only equipped with the MESECAM model.

Fig. 1-1

2. ELECTRICAL ADJUSTMENT

2-1. PREPARATION

2-1-1. EQUIPMENT

- Color TV monitor
- Sweep generator (SECAM)
- PAL colour-bar generator (with RF and LINE OUTPUT)
- SECAM colour-bar generator (with RF and LINE OUTPUT)
- SECAM vectorscope
- Audio frequency oscillator
- AC voltmeter
- In/output probes
- Attenuator
- Oscilloscope (dual trace; frequency response: 10MHz or more; probe: 10:1)
- Audio distrotion meter
- Frequency counter (countable to 10MHz or higher)
- Digital voltmeter
- DM-4 Extension cable (VHJ-0054)
- Alignment cassette (VHJ-0008) PAL Colour bar 1KHz
- Alignment cassette (VHD-0009) Monoscope 6KHz
- Alignment cassette (VHJ-0051) Check for D.O.C.
- Alignment cassette (VHJ-0023) PAL Monoscope 6KHz, PAL Colour-bar 1KHz, SECAM Colour-bar 1KHz, PAL RF Sweep MESECAM Colour-bar 1KHz, NTSC Colour-bar 1KHz.
- Alignment cassette (VHJ-0019) SECAM Colour-bar-1KHz
- Spectrum analyzer

2-1-2. SET-UP

Because the RF input signal is used for adjustment of circuits, connect the colour-bar generator to the ANT IN terminal of the VCR. The RF input signal is processed by the tuner and IF circuit. It is important that the video output signal of the IF circuit satisfy the items shown in Fig. 2-1 and Fig. 2-2. Connect the oscilloscope to the VIDEO OUTPUT terminal of the video circuit, and then check the video output signal.

- The amplitude of the sync signal should be approximately 0.3Vp-p.
- The amplitude of the video signal should be approximately 0.7Vp-p.
- While observing the oscilloscope or TV screen, make fine-tuning adjustments so that the colour burst amplitude is approximately 0.3Vp-p.
- Check to be sure that there is no spike noise in the sync part of the horizontal sync signal.

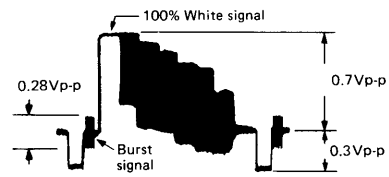

Fig. 2-1 PAL Colour-bar signal

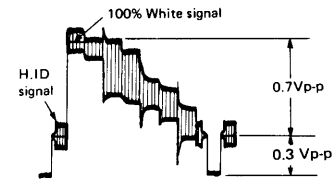

Fig. 2-2 SECAM Colour-bar signal

2-2. SERVO CIRCUIT ADJUSTMENT ... Compl. CP-A

NOTE (1): These adjustments should be carried out upon completion of the tape transport adjustments.
(2): If the tape transport adjustments are carried out after these adjustments, follow the procedures again in CH-1, CH-2 SWITCHING POSITIONS.

No.	Item	Input	Mode	Point	Location	Remark
1	CH-1, CH-2 SWITCHING POSITION	Alignment cassette (VHJ-0009 or VHJ-0023)	PLAY	TP161 or CN161 ⑲ CN359 ① (trigger)	VR351	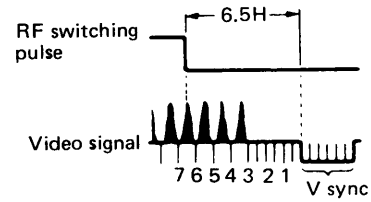 1. Set the tracking control to the center position (on the display "T –:– "). 2. Adjust VR351 so that the phase of the leading edge of the vertical syne signal is delayed 6.5 ± 0.5 H from the fall of the RF switching pulse waveform.

No.	Item	Input	Mode	Point	Location	Remark
2	SLOW TRACKING	Any TV broadcast	REC ⬇ PLAY ⬇ SLOW	TV screen	VR362	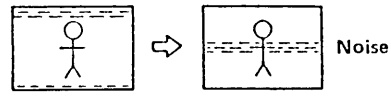 1. Connect a lead wire between TP401 (compl. CP-A) and ground. 2. Playback the recorded portion, and put the VCR in the SLOW mode by remote control unit. 3. Set the tracking control to the center position (on the display " T –:– "). 4. Adjust VR362 so that the noise appears at the center position on the TV screen. 5. Remove a lead wire.

2-3. VIDEO CIRCUIT ADJUSTMENT ... Compl. VD-1 and Compl. VP-1

NOTE (1): When adjusting No. 1, No. 3 and No. 4 terminate VIDEO OUTPUT terminal or CN161 pin 19 (Compl. CP-A) at 75 ohms.

(2): To make this adjustment, alternately make the adjustments described in No. 2 and No. 3 below. Repeat this procedure until both adjustment values are satisfied.

(3): 'No-signal REC mode' is not to supply any signal to VIDEO INPUT terminal or CN161 pin 20 (Compl. CP-A).

No.	Item	Input	Mode	Point	Location	Remark
1	E-E LEVEL NOTE (1)	Colour bar from PAL Colour bar generator	E-E	TP161 or CN161 ⑲ (Compl. CP-A)	VR104	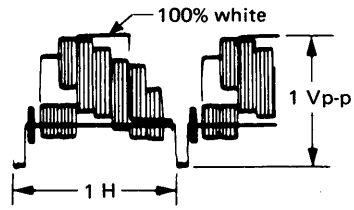 Adjust VR104 so that the level is 1.00 ± 0.05 Vp-p.
2	CARRIER SET NOTE(2), (3)	No-signal	REC	TP102 (Compl. VD-1) or TP162 (Compl. CP-A)	VR101	1. Press the TU/AV button on the remote control unit to the "AV" position and put the VCR in the no-signal mode. 2. Adjust VR101 so that the frequency is 3.80 ± 0.05 MHz.
3	DEVIATION NOTE (1), (2)	Colour bar (includes 100% white peak) from PAL Colour bar generator	REC (Adjustment) ⬇ PLAY (Check)	TP161 or CN161 ⑲ (Compl. CP-A)	VR102	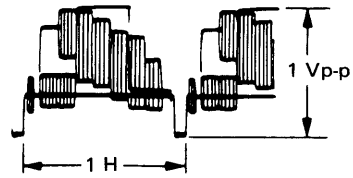 1. Playback the recorded part, and check that the level is 1.00 ± 0.05 Vp-p. 2. If the level is not 1.00 ± 0.05 Vp-p, adjust VR102, record and playback it until the value is satisfied.

No.	Item	Input	Mode	Point	Location	Remark
4	PLAYBACK LEVEL NOTE (1)	Alignment cassette (VHJ-0008 or VHJ-0023)	PLAY (Colour bar)	TP161 or CN161 ⑲ (Compl. CP-A)	VR103	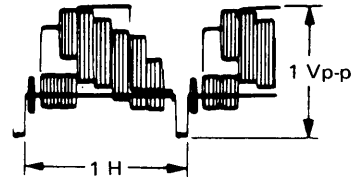 Adjust VR103 so that the level is 1.00 ± 0.05 Vp-p.
5	VXO	Brank tape	PLAY	TP163 (Compl. CP-A)	VR121	Adjust VR121 so that the frequency is 4433619 ± 20 Hz.
6	CCD LEVEL	Alignment cassette (VHJ-0051)	PLAY	TP161 or CN161 ⑲ (Compl. CP-A)	VR111	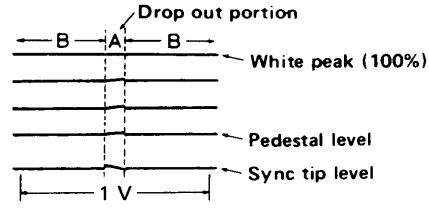 1. Set the horizontal scale (TIME/DIV) of the oscilloscope to 1 msec./div. 2. Adjust VR111 so that the drop out portion "A" of white peak (100%) and other portion "B" is same level.
7	CHRO-MINANCE SIGNAL RECORDING CURRENT	Colour bar from PAL Colour bar generator	REC	CN183 ② or TP181 (HOT) CN183 ① or shield case (GND) (Compl. VP-1) See Fig. 2-10-1	VR182	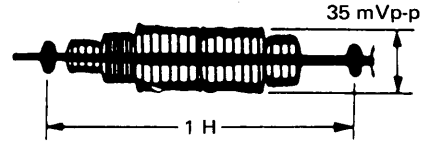 1. Turn VR181 all the way to the right, looking from the parts side. 2. Adjust VR182 so that the level is 35 ± 2 mVp-p.
8	LUMINANCE SIGNAL RECORDING CURRENT NOTE (3)	No-signal	REC	CN183 ② or TP181 (HOT) CN183 ① or shield case (GND) (Compl. VP-1) See Fig. 2-10-1	VR181	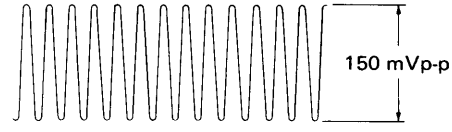 1. Press the TU/AV button on the remote control unit to "AV" position and put the VCR in the no-signal REC mode. 2. Adjust VR181 so that the level is 150 ± 5 mVp-p.

2-4. VIDEO DIGITAL PROCESSING CIRCUIT ADJUSTMENT ..... Compl. DM-1, DM-2, DM-4

NOTE (1): The digital processing circuit boards (Compl. DM-3/DM-4) are inserted to the Compl. DM-1 mother board socket. Use the DM-4 extension cable (VHJ-0054) when repair the Compl. DM-4 board.

NOTE (2): Adjustment of No. 9 to No. 27 for the model VHR-D4600, VHR-D4600I, VHR-D4600SA, VHR-D4600SP, VHR-4610E is not necessary.

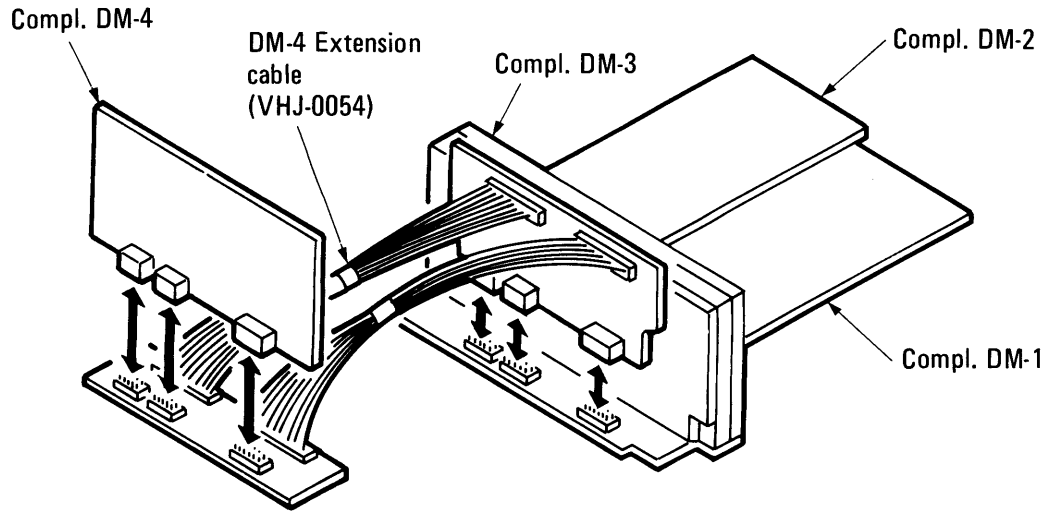

Fig. 2-3 Method of using jigs

(SETTING BEFORE ADJUSTMENT)

1. Select the TU/AV button to "AV" position.
2. Connect the PAL or SECAM colour-bar generator to VIDEO INPUT terminal or CN161 pin 20 (Compl. CP-A).

No.	Item	Input	Mode	Point	Location	Remark
1	DECODER VXO	No-signal	E-E	IC477 ⑱ (Compl. DM-1)	CT471 (Compl. DM-1)	1. Does not supply any signal to CN161 pin20 (Compl. CP-A). 2. Connect a lead wire between minus polarity of C4766 and ground. 3. Adjust CT471 so that the frequency is 4433619 ± 20 Hz. 4. Remove a lead wire.
2	DECODER TINT	Colour-bar from PAL Colour-bar generator	E-E	DM-3 board ⑥ (Foil side of Compl. DM-1)	VR477 (Compl. DM-1)	R-Y signal 1 H → 1 H 1. Turn VR476 to the center position. 2. Adjust VR477 so that the waveform is merged together to becomes as one.
3	DECODER ACC	Colour-bar from PAL Colour-bar generator	E-E	DM-3 board ⑥ (Foil side of Compl. DM-1)	VR476 (Compl. DM-1)	R-Y signal 0.8 Vp-p 1 H Adjust VR476 so that the level is 0.8 ± 0.05 Vp-p.

No.	Item	Input	Mode	Point	Location	Remark
4	AGC LEVEL	Colour-bar (includes 100% white peak) from PAL Colour-bar generator	PinP	CN472 ⑥ or TP471 (Compl. DM-1)	VR472 (Compl. DM-1)	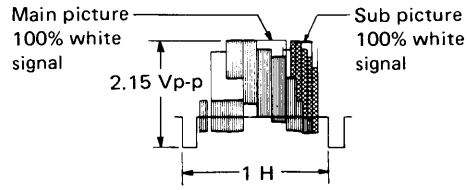 1. Supply PAL colour-bar signal for the main picture, and supply any TV signal for the sub picture. 2. Adjust VR472 so that the main picture luminance signal level is 2.15 ± 0.1 Vp-p.
5	ENCODER CARRIER LEAK	Colour-bar (includes 100% white peak) from PAL Colour-bar generator	E-E DIGITAL THROUGH	CN472 ⑥ or TP471 (Compl. DM-1)	VR474 VR475 (Compl. DM-1)	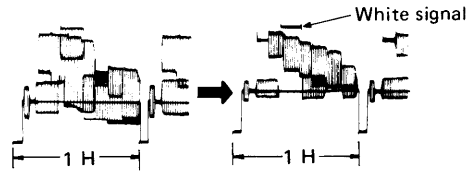 1. Put the VCR in the E-E mode, then press the ZOOM button four times. 2. Adjust VR474 and VR475 so that the white signal carrier leakage is minimum.
6	Y-LEVEL	Colour-bar (includes 100% white peak) from PAL Colour-bar generator	E-E DIGITAL THROUGH	CN472 ⑥ or TP471 (Compl. CM-1)	VR478 (Compl. DM-1)	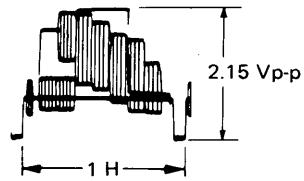 1. Put the VCR in the E-E mode, then press the ZOOM button four times. 2. Adjust VR478 so that the luminance level is 2.15 ± 0.1 Vp-p.
7	ENCODER TINT	Colour-bar from PAL Colour-bar generator	PinP	TP161 or CN161 ⑲ (Compl. CP-A)	VR471 (Compl. DM-1)	1. Record the PAL colour-bar signal on to a video cassette tape using colour-bar generator previously. 2. Input the PAL colour-bar signal to CN161 pin ⑳ (Compl. CP-A) from the PAL colour-bar generator. 3. Set the VCR to PLAY mode playbacked by before mention colour-bar recorded tape cassette and set the VCR to PinP mode. 4. Turn VR471 to the center position. 5. Select the main picture and sub picture alternately, and check the hue of both pictures are almost the same. (VR471 is designed to be a center position when the adjustment is carried out).
8	ENCODER CHROMA LEVEL	Colour-bar from PAL Colour-bar generator	PinP	TP161 CN161 ⑲ (Compl. CP-A)	VR473 (Compl. DM-1)	1. through 3. same as "No. 7 ENCODER TINT". 4. Select the main picture and sub picture alternately, and adjust VR473 so that the chrominance contrast of both pictures are almost the same.

No.	Item	Input	Mode	Point	Location	Remark
9	SUB BELL FILTER	Sweep signal from sweep generator	E-E	T4205 ② (Compl. DM-2) 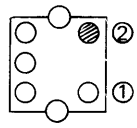 (Bottom view)	T4205 (Compl. DM-2)	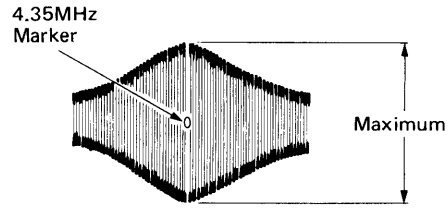 1. Connect the sweep generator to CN161 ⑳ (Compl. CP-A), and the oscilloscope to pin ② of T4205. 2. Adjust T4205 so that the marker portion of 4.35 MHz is maximum.
10	MAIN BELL FILTER	Sweep signal from sweep generator	Pin P	T4201 ① (Compl. DM-2) 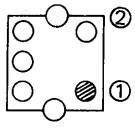 (Bottom view)	T4201 (Compl. DM-2)	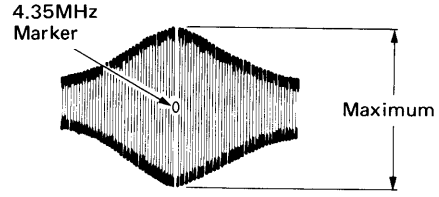 1. Supply the sweep signal for the main picture. 2. Connect the sweep generator to CN161 ⑳ (Compl. CP-A), and the oscilloscope to pin ② of T4201. 3. Adjust T4201 so that the marker portion of 4.35 MHz is maximum.
11	SUB CHROMA LINE DETECTION	Colour bar from SECAM Colour bar generator	E-E	IC423 ① (Compl. DM-2)	T4206 (Compl. DM-2)	Adjust T4206 so that DC voltage is 4.9 ± 0.02 V.
12	MAIN CHROMA LINE DETECTION	Colour bar from SECAM Colour bar generator	Pin P	IC421 ① (Compl. DM-2)	T4202 (Compl. DM-2)	1. Supply SECAM colour-bar signal for the main picture. 2. Adjust T4202 so that the DC voltage is 4.9 ± 0.02 V.
13	SUB B-Y SIGNAL	Colour bar from SECAM Colour bar generator	E-E	DM-3 board ⑤, ⑥ (Foil side of Compl. DM-1)	VR422 CT424 (Compl. DM-2)	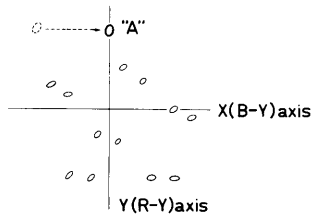 1. Connect the X input of oscilloscope to pin ⑤ of DM-3 board, and the Y input of oscilloscope to pin ⑥ of DM-3 board. 2. Set the both of VOLTS/DIV range to 100mV/DIV. 3. Set VR422 to the middle position. 4. Rotate CT424 and move the spot "A" close to the center of the lissajous figures on the X (B-Y) axis.

No.	Item	Input	Mode	Point	Location	Remark
14	SUB R-Y SIGNAL	Colour bar from SECAM Colour bar generator	E-E	DM-3 board ⑤, ⑥ (Foil side of Compl. DM-1)	CT423 VR422 (Compl. DM-2)	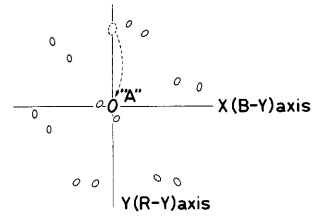 1. through 4. Same as "No. 13 SUB B-Y SIGNAL". 5. Rotate CT423 and move the spot "A" close to the center of the lissajous figures on the Y (R-Y) axis.
15	SUB B-Y, R-Y SIGNAL	Colour bar from SECAM Colour bar generator	E-E	DM-3 board ⑤, ⑥ (Foil side of Compl. DM-1)	CT423 CT424 VR422 (Compl. DM-2)	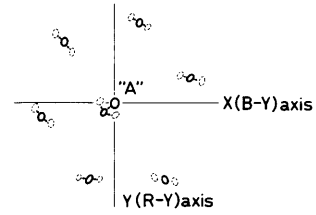 1. through 5. Same as "No. 14 SUB R-Y SIGNAL". 6. Adjust VR422 so that the plural spots (except "A" spot) become one dot. 7. Readjust CT423 and CT424 so that the spot "A" become one dot.
16	MAIN B-Y SIGNAL	Colour bar from SECAM Colour bar generator	Pin P	CN477 ⑪, ⑬ (Foil side of Compl. DM-1)	VR421 CT422 (Compl. DM-2)	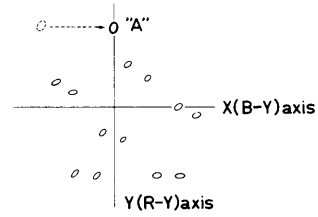 1. Supply SECAM colour-bar signal for the main picture. 2. Connect the X axis of the oscilloscope to pin ⑬ of CN477 and Y axis of oscilloscope to pin ⑪ of CN477. 3. Set the both of VOLTS/DIV range to 100mV/DIV. 4. Set VR421 to the middle position. 5. Rotate CT422 and move the spot "A" close to the center of the lissajous figures on the X (B-Y) axis.
17	MAIN R-Y SIGNAL	Colour bar from SECAM Colour bar generator	Pin P	CN477 ⑪, ⑬ (Foil side of Compl. DM-1)	CT421 VR421 (Compl. DM-2)	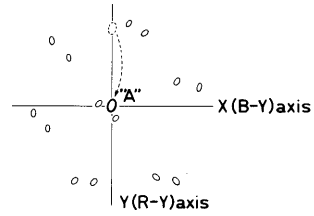 1. through 5. Same as "No. 16 MAIN B-Y SIGNAL". 6. Rotate CT421 and move the spot "A" close to the center of the lissajous figures on the Y (R-Y) axis.

NOTE (1): 'No-signal E-E mode' is does not supply any signal to VIDEO INPUT terminal or CN161 pin 20 (Compl. CP-A). and select the TU/AV button to AV position.

No.	Item	Input	Mode	Point	Location	Remark
18	MAIN B-Y, R-Y SIGNAL	Colour bar from SECAM Colour bar generator	Pin P	CN477 ⑪, ⑬ (Foil side of Compl. DM-1)	CT421 CT422 VR421 (Compl. DM-2)	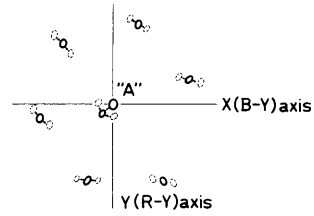 1. through 6. Same as "No. 17 MAIN R-Y SIGNAL". 4. Adjust VR421 so that the plural spots (except "A" spot) become one dot. 5. Readjust CT421 and CT422 to that the spot "A" become one dot.
19	ENCODER VCO LOCK SENSE NOTE (1)	No-signal	E-E	IC426 ⑭ (Compl. DM-2)	CT425 (Compl. DM-2)	1. Connect the frequency counter to pin ⑭ of IC426. 2. Check to be sure that osillating frequency of X4201 is 4.40625MHz ± 20 Hz. 3. Connect the digital voltmeter to pin ⑭ of IC426. 4. Adjust CT425 so that the DC voltage level is 2.65 ± 0.05 V.
20	ENCODER DC SHIFT NOTE (1)	No-signal	E-E	IC426 ⑱ (Compl. DM-2)	VR423 VR424 (Compl. DM-2)	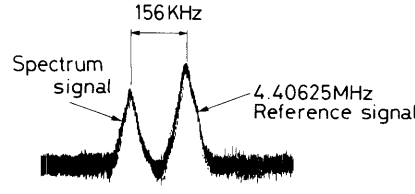 1. Connect the spectrum analyzer to pin ⑱ of IC426 and check that 4.40625MHz reference signal (equivalent to about 282fH) is displayed on the screen. 2. Rotate VR423 fully counterclockwise to disappear the chroma signal. 3. Adjust VR424 so that the another spectrum signal (equivalent to about 272fH) is located 156 ± 8 KHz lower than 4.40625MHz reference signal. 4. Rotate VR423 fully clockwise to appear the chroma signal.

No.	Item	Input	Mode	Point	Location	Remark
21	SUB PICTURE BLANKING	Colour-bar from SECAM Colour-bar generator	E-E	CN472 ④ (Compl. DM-1) CN751 ⑦ (Compl. DM-4)	VR753 (Compl. DM-4)	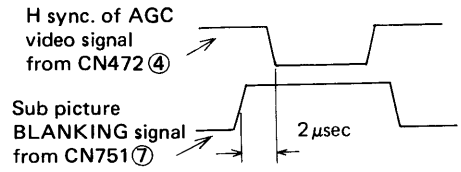 1. Connect the oscilloscope to pin ④ of CN472 and pin ⑦ of CN751. 2. Adjust VR753 so that the phase difference of the rise of BLANKING waveform is 2.0 ± 0.1μsec after the fall of H sync of video signal.
22	MAIN PICTURE BLANKING	Colour-bar from SECAM Colour-bar generator	E-E ↓ PinP	CN472 ④ (Compl. DM-1) CN751 ⑨ (Compl. DM-4)	VR754 (Compl. DM-4)	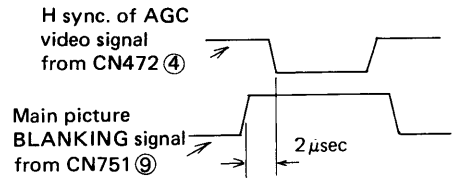 1. Supply colour-bar signal to the main picture. 2. Connect the oscilloscope to pin ④ of CN472 and pin ⑨ of CN751. 3. Adjust VR754 so that the phase difference of the rise of BLANKING waveform is 2.0 ± 0.1μsec after the fall of H sync of video signal.
23	SUB H·ID WIDTH	Colour-bar from SECAM Colour-bar generator	E-E	CN472 ④ (Compl. DM-1) CN751 ⑥ (Compl. DM-4)	VR752 (Compl. DM-4)	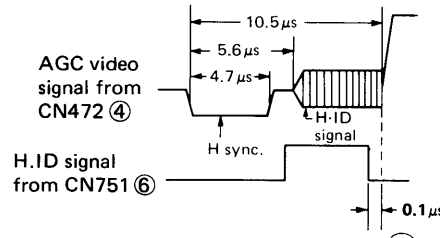 1. Connect the oscilloscope to pin ④ of CN472 and pin ⑥ of CN751. 2. Adjust VR752 so that the phase difference of the fall of H-ID waveform is 0.1 ± 0.1μsec after the rise of video signal.
24	MAIN H·ID WIDTH	Colour-bar from SECAM Colour-bar generator	E-E	CN472 ④ (Compl. DM-1) CN751 ⑧ (Compl. DM-4)	VR751 (Compl. DM-4)	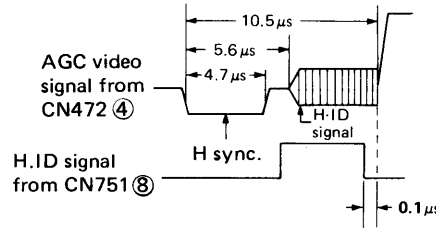 1. Supply colour-bar signal to the main picture. 2. Connect the oscilloscope to pin ④ of CN472 and pin ⑧ of CN751. 3. Adjust VR751 so that the phase difference of the fall of H-ID waveform is 0.1 ± 0.1μsec after the rise of video signal.

No.	Item	Input	Mode	Point	Location	Remark
25	SUB PICTURE COLOUR BALANCE	Colour-bar from SECAM Colour-bar generator	E-E DIGITAL THROUGH	TP161 or CN161 ⑲ (Compl. CP-A)	CT423 CT424 (Compl. DM-2)	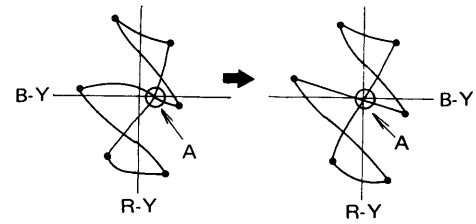 1. Set the VCR to the "E-E" mode. 2. Connect the vectorscope to TP161 or CN161 ⑲ (on the Compl. CP-A). 3. Press the ZOOM button four times, the magnification of picture will change in the sequence x4 → x9 → x16 → Normal (digital picture). 4. Observe the vector waveform on the above normal picture. 5. Adjust CT423 and CT424 until "A" position in the waveform become center of the B-Y, R-Y aixs.
26	MAIN PICTURE COLOUR BALANCE	Colour-bar from SECAM Colour-bar generator	E-E ↓ PinP	TP161 or CN161 ⑲ (Compl. CP-A)	CT421 CT422 (Compl. DM-2)	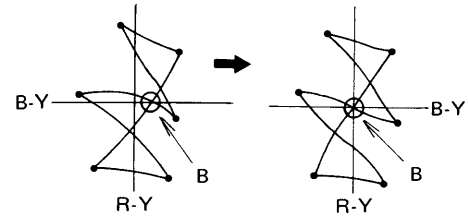 1. Supply the colour-bar signal to the main picture. 2. Adjust CT421 and CT422 until "B" position in the waveform become center of the B-Y, R-Y aixs.
27	ENCODER COLOUR GAIN	Colour-bar from SECAM Colour-bar generator	E-E ↓ MEMORY	TP161 or CN161 ⑲ (Compl. CP-A)	VR423 (Compl. DM-2)	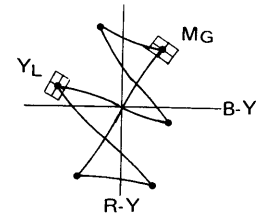 1. Set the VCR to the "MEMORY" mode. 2. Adjust VR423 so that the MG & YL vector spots close to each specified scale (marked: ⊞).

2-5. AUDIO CIRCUIT ADJUSTMENT ..... Compl. AD-1

NOTE (1): 'No-signal record mode' is not to supply any signal to AUDIO INPUT terminal or CN161 ②, ⑥ (Compl. CP-A).

No.	Item	Input	Mode	Point	Location	Remark
1	BIAS	No-signal	REC	CN204 ③ CN204 ① (GND)	VR201	1. Press the TU/AV button on the remote control unit to the "AV" position and put the VCR in the no-signal record mode. 2. Adjust VR201 so that the level is 22 mV rms.

NOTE (2): Item No. 2 apply to the model that equipped with 21 pin SCART on the rear terminal board.
NOTE (3): Item No. 3 apply to the model that equipped with RCA pin jack on the rear terminal board.

No.	Item	Input	Mode	Point	Location	Remark
2	PLAYBACK OUTPUT LEVEL	Audio signal (1 KHz, –3.8 dBs) from frequency oscillator	REC ⬇ PLAY	CN161 ①, ③ (Compl. CP-A)	VR202	Adjust VR202 so that the recorded 1 KHz output level becomes –3.8 dBs in the PLAY mode.
3	PLAYBACK OUTPUT LEVEL	Audio signal (1 KHz, –20 dBs) from frequency oscillator	REC ⬇ PLAY	AUDIO OUT terminal	VR202	Adjust VR202 so that the recorded 1 KHz output level becomes –8 dBs in the PLAY mode.

2-6. IR SOUND TRANSMITTER CIRCUIT ..... Compl. IR-1

NOTE: The IR SOUND TRANSMITTER CIRCUIT section adjustment has separate adjustment items for the Lch and Rch. The Rch adjustments are included in parentheses.

SETTING BEFORE ADJUSTMENT
(1) Remove the connector CN214 from the Compl. AD-1.

No.	Item	Input	Mode	Point	Location	Remark
1	NOISE REDUC-TION OPERAT-ING CURRENT	Audio signal (1KHz, –4.4 dBs) from Audio frequency oscillator	E-E	IC552 ⑫ (HOT) IC552 ⑬ (GND)	VR551	1. Connect an audio frequency oscillator to pin 5 and pin 7 of CN551. Then adjust the oscillation output to 1KHz, –4.4dBs. 2. Connect an AC voltmeter across R5602 (R5702). 3. Confirm that the signal input level is –31.8 ± 0.4dBs. Readjust the oscillation output when the signal input level is not –31.8 ± 0.4 dBs. 4. Connect a digital voltmeter to pin 12 and pin 13 of IC552. 5. Adjust VR551 so that the voltage is 15mV ± 0.15mV [DC].
2	FM CARRIER FRE-QUENCY OSCILLA-TION	None	E-E	IC561 ④ (Lch) IC571 ④ (Rch)	VR561 (Lch) VR571 (Rch)	1. Connect a frequency counter to pin 4 of IC561 (IC571). 2. Adjust VR561 (VR571) so that the frequency is 95 kHz (250 kHz) ± 1 kHz.

2-7. IR SOUND RECEIVER CIRCUIT ..... Compl. IR-3

NOTE (1): The adjustment should be carried out completion of the IR sound transmitter (Compl. IR-1).
NOTE (2): The IR SOUND RECEIVER CIRCUIT section adjustment has separate adjustment items for Lch and Rch. The Rch adjustments are included in parentheses.
NOTE (3): While adjusting item 4, turned down the volume of the headphones.

SETTING BEFORE ADJUSTMENT

(1) Connect a output terminal of the audio frequency oscillator to the both (LcH) and (RcH) of AUDIO LINE-IN on the VCR.
(2) Set the output of the audio frequency oscillator to 1 KHz, –4.4dBs.
(3) IR sound switch to ON position, and maintain approx. 2 meters and in the right direction between the IR sound receiver and the VCR.

No.	Item	Input	Mode	Point	Location	Remark
1	DETECTING CENTER-FRE-QUENCY NOTE (2)	Audio signal (1 KHz, –4.4 dBs) from audio frequency oscillator	AV	TP102 (LcH) TP202 (RcH)	VL101 (LcH) VL201 (RcH)	1. Connect an audio distortion meter to TP102 (TP202). 2. Adjust VL101 (VL201) so that the distortion is minimum.
2	NOISE REDUC-TION INPUT LEVEL NOTE (2)	Audio signal (1 KHz, 4.4 dBs) from audio frequency oscillator	AV	TP101 (LcH) TP201 (RcH)	VR101 (LcH) VR201 RcH)	1. Connect an AC voltmeter to TP101 (TP201). 2. Adjust VR101 (VR201) so that the input level is –31.8 dBs.
3	NOISE REDUC-TION OPERA-TION CURRENT	Audio signal (1 KHz, 4.4 dBs) from audio frequency oscillator	AV	TP1 TP2	SVR1	1. Connect a digital voltmeter to TP1 and TP2 respectively. 2. Adjust SVR1 so that the voltage (between TP1 and TP2) is 15 ± 0.15 mV.
4	MUTING SENSI-TIVITY NOTE (3)	Audio signal (1 KHz, 4.4 dBs) from audio frequency oscillator	AV	HEAD-PHONES	VR301	1. Connect the headphones to the IR sound receiver. 2. Set the IR sound switch to the OFF position and adjust VR301 until the random noise just disappears. 3. After that, the IR sound switch to ON position. 4. Cover the lens of IR sound receiver with hand slowly and check so that the mute operation can be obtained. 5. Readjust VR301 in case of the random noise still appears.

2-8. TUNER IF CIRCUIT ADJUSTMENT . . . Compl. TN-1

No.	Item	Input	Mode	Point	Location	Remark
1	RF AGC	TV broadcast	E-E	TV screen	SVR6101 or VR6101 or VR611	1. Remove the rear terminal board from Compl. CP-A. (see Fig. 2-9-1) 2. Turn SVR6101 or VR6101 or VR611 in the direction which causes snow to appear, then in the opposite direction until the snow just disappears.

2-9. TEST POINT AND ADJUSTMENT LOCATIONS

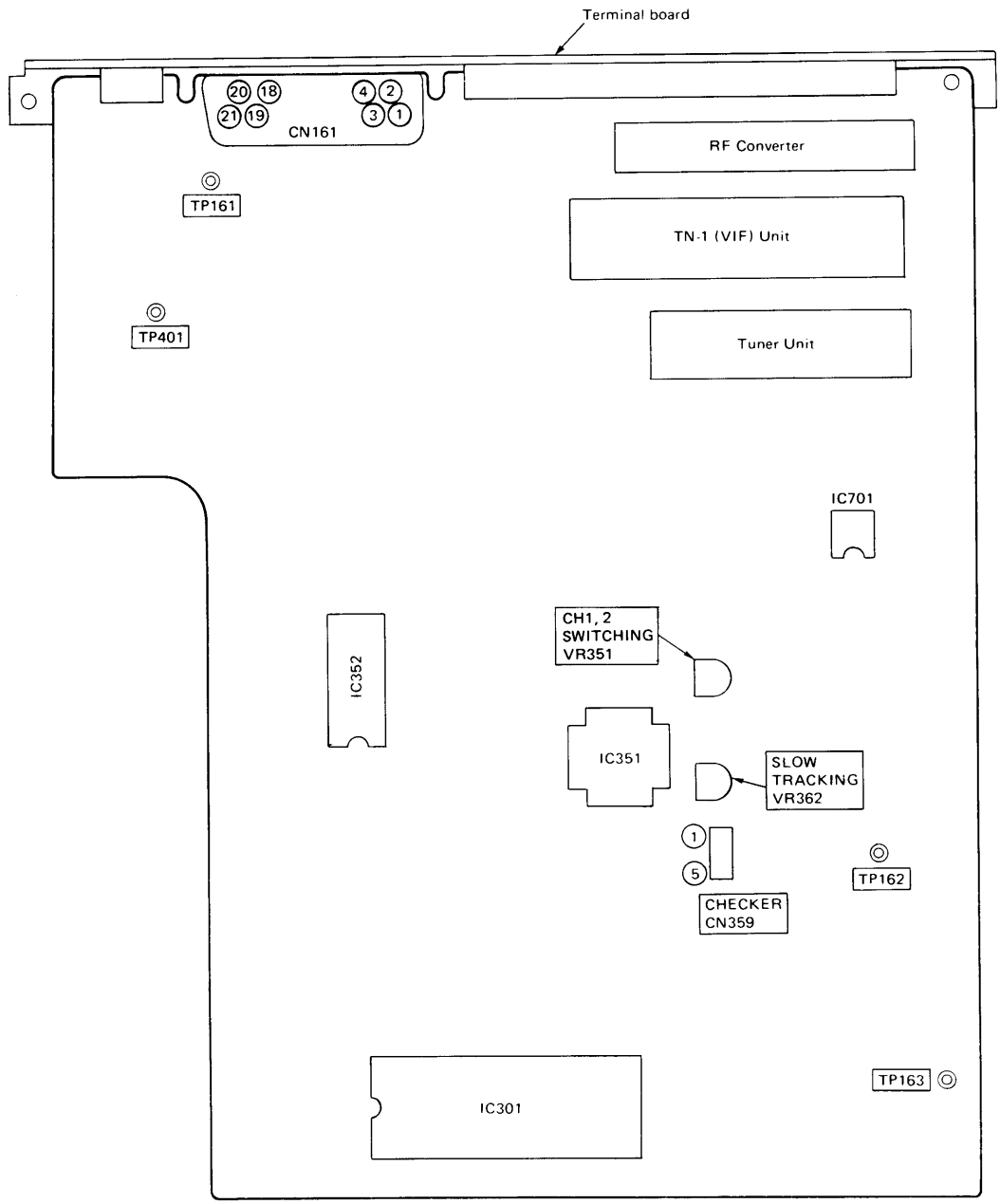

Fig. 2-9-1 Compl. CP-A (Foil side view)

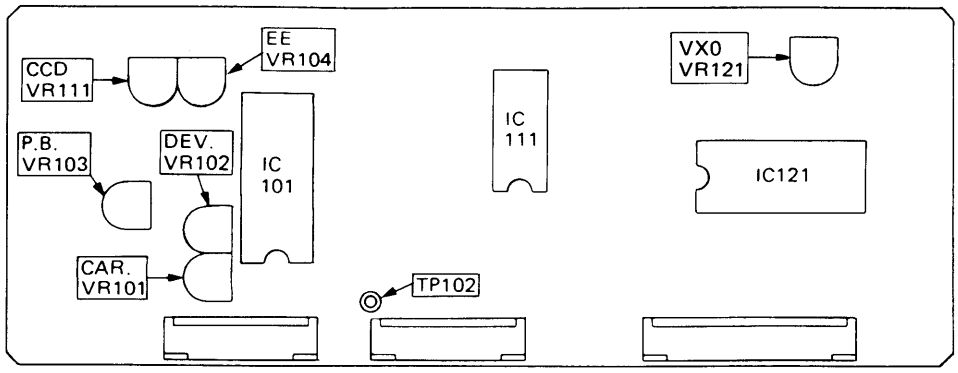

Fig. 2-9-2 Compl. VD-1 (Foil side view)

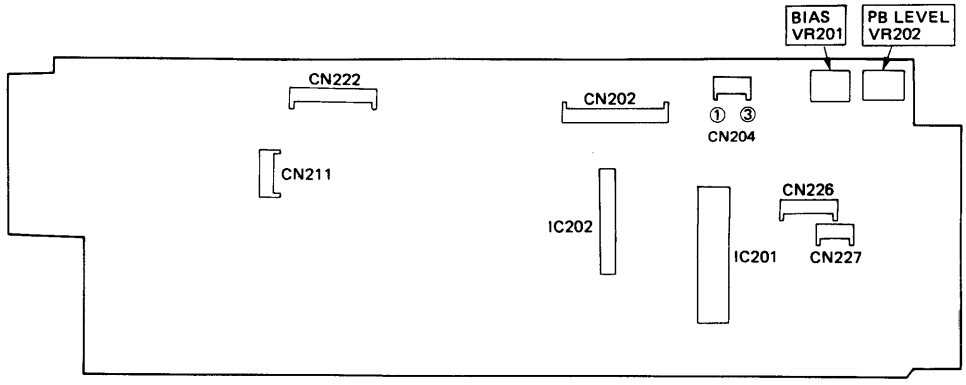

Fig. 2-9-3 Compl. AD-1 (Foil side view)

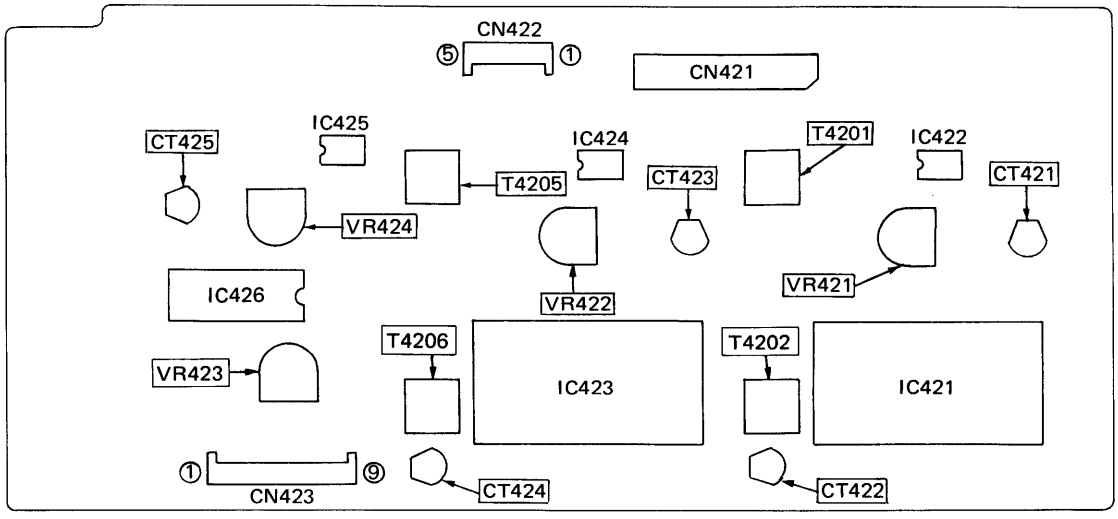

Fig. 2-9-4 Compl. DM-2 (Parts side view)

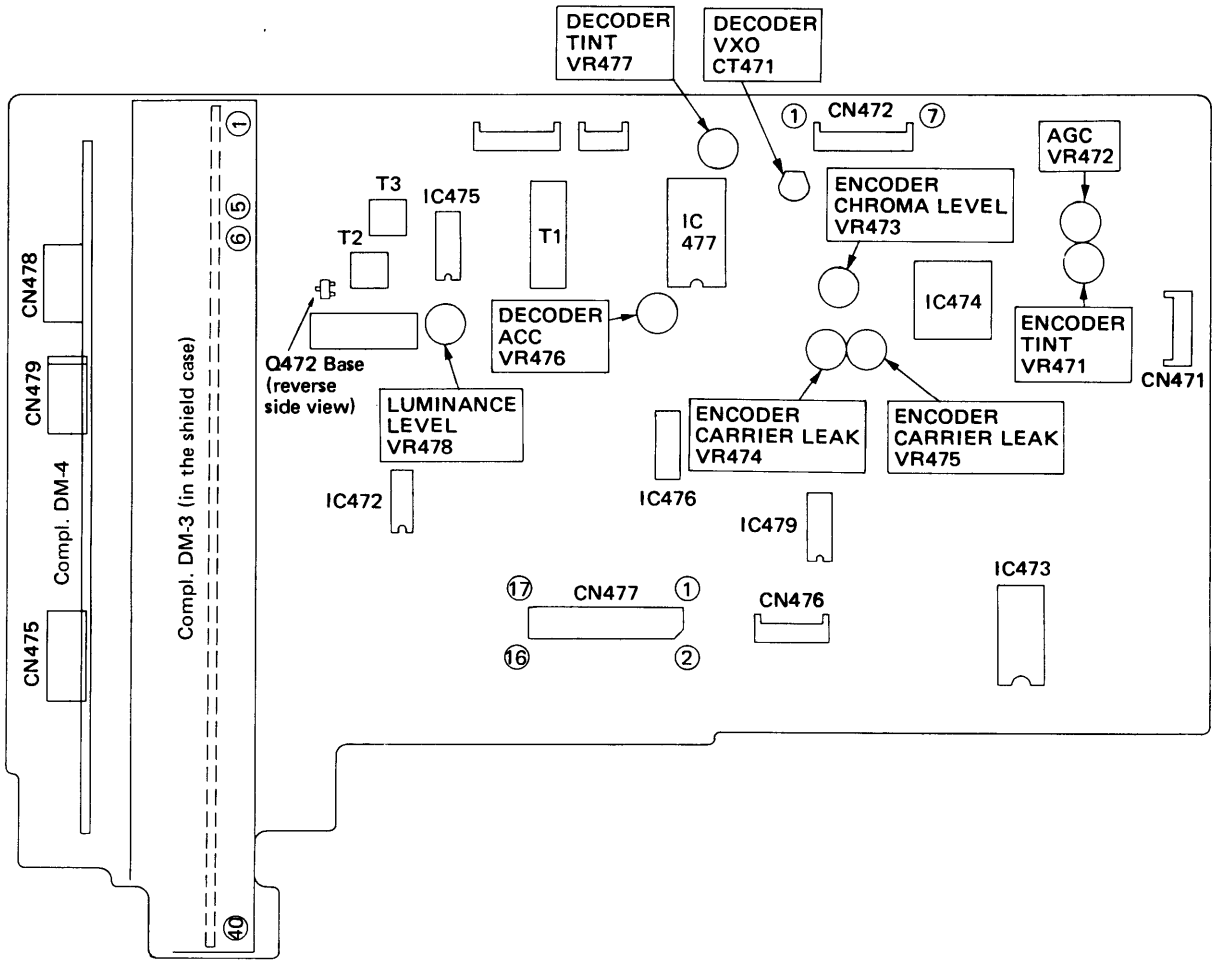

Fig. 2-9-5 Compl. DM-1 (Parts side view)

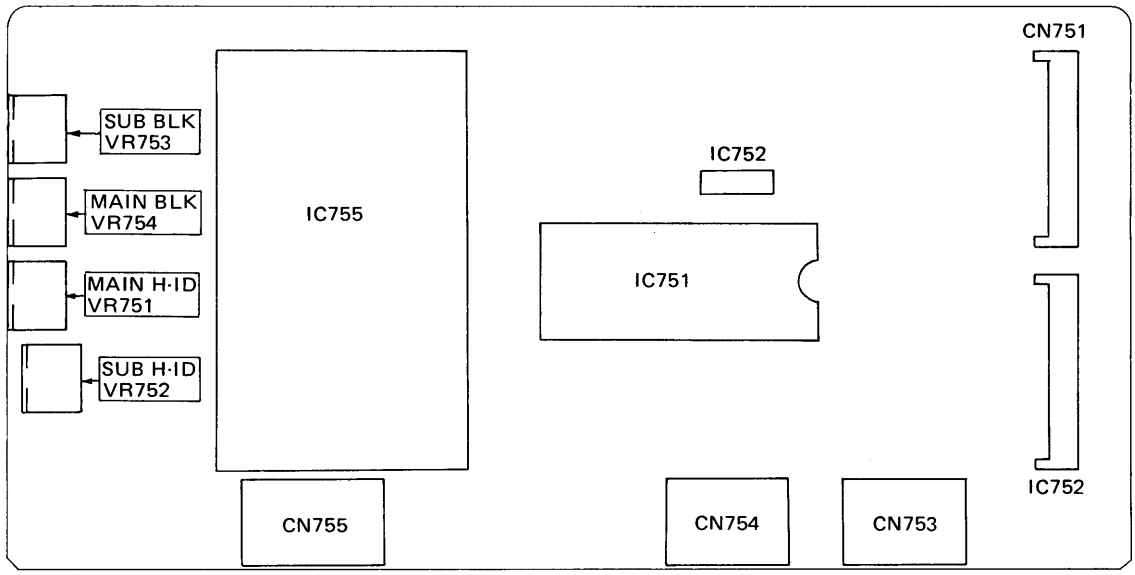

Fig. 2-9-6 Compl. DM-4 (Foil side view)

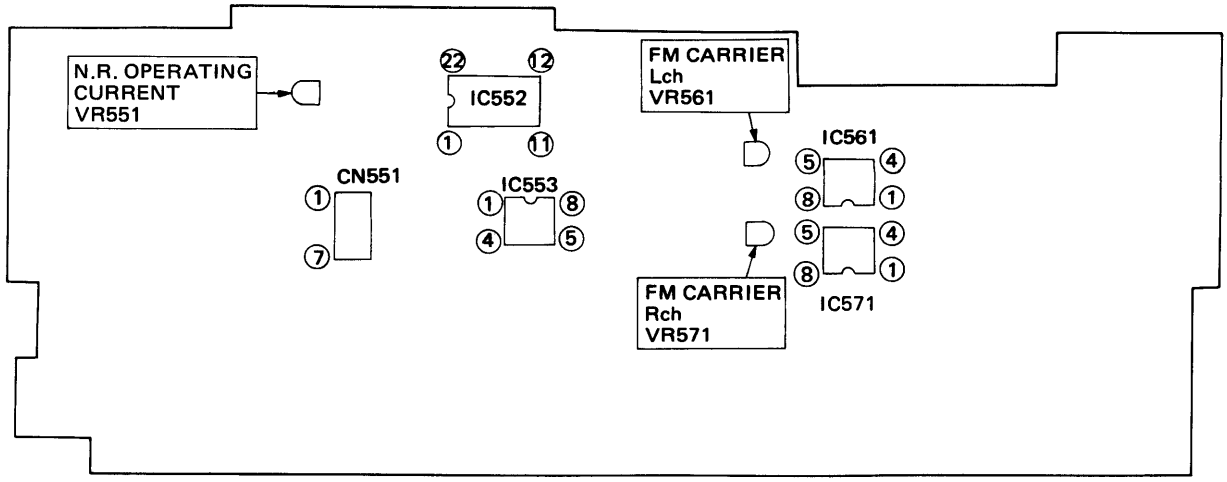

Fig. 2-9-7 Compl. IR-1 (Parts side view)

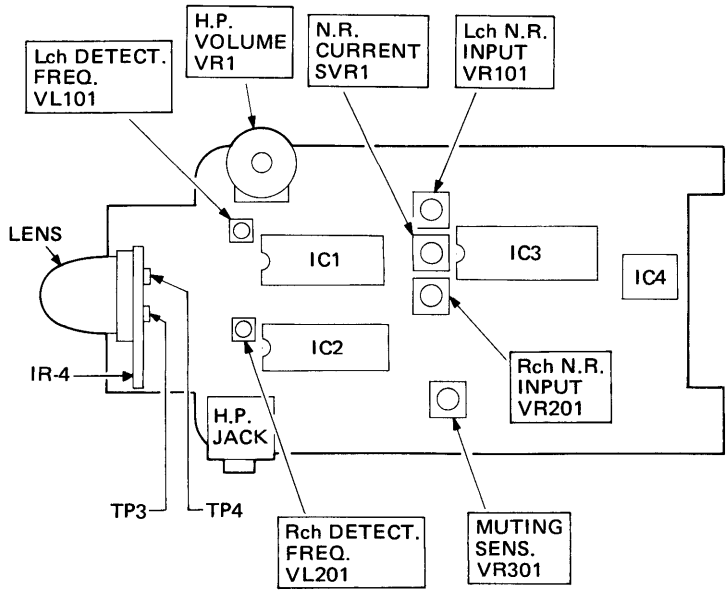

(Parts side view)

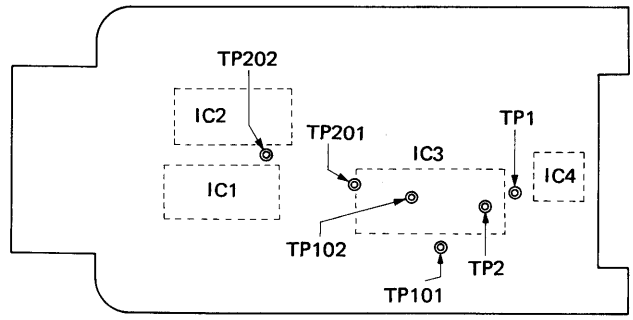

(Foil side view)

Fig. 2-9-8 Compl. IR-3

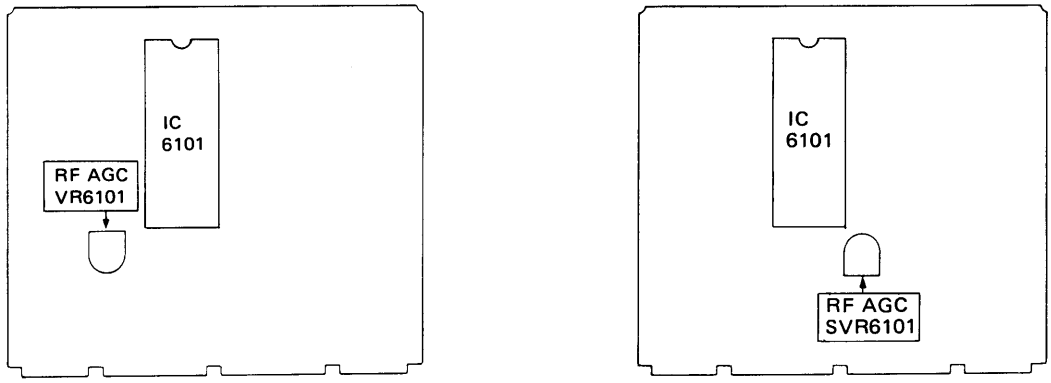

Model:
VHR-D4600EV, D4600EX, D4600G, D4600I, D4610E

Model:
VHR-D4600, D4600EE, D4600SA, D4600SP, D4600PS

Fig. 2-9-9 Compl. TN-1 (Parts side view)

2-10. TEST POINT FOR TAPE PATH ADJUSTMENT

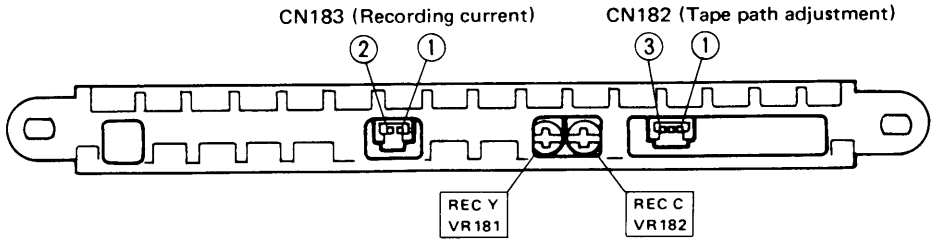

(A): Early product

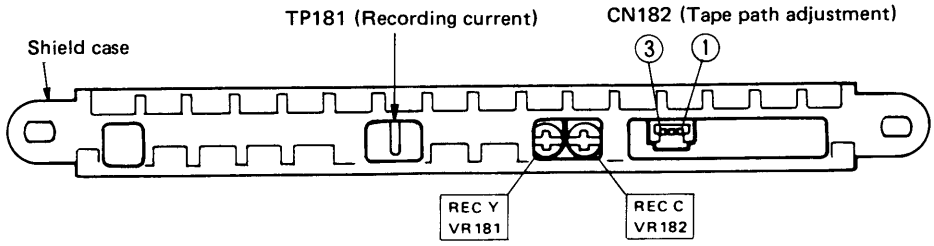

(B): Modified in the course of production

Fig. 2-10-1 Compl. VP-1

A11300 Dec./'88/6000 NS Printed in Japan

SANYO Electric Co., Ltd.
Osaka, Japan

SANYO

Parts List Supplement

Colour Video Cassette Recorder

VHR-D4610E (U.K.)

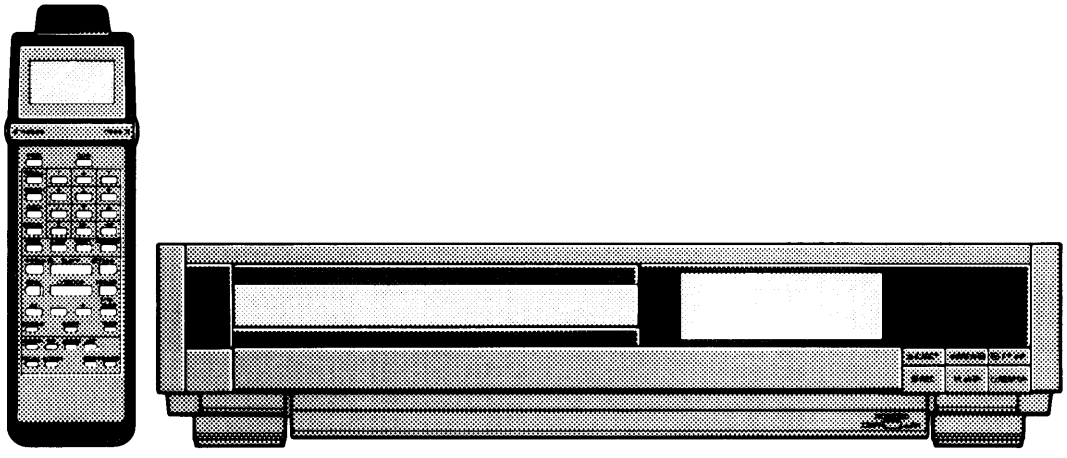

VHS HQ PAL

Pleaes add this supplement to the Parts List (WM-530077) below.

LOCATION	PARTS NO.	DESCRIPTION
REMOTE CONTROL		
COMPL.NO.	613 084 7355	
1	613 086 6158	ASSY.CABINET.TOP
2	613 086 5069	WINDOW
3	613 087 9189	BRACKET.LCD
4	613 085 5299	LCD
5	613 087 8816	CONNECTOR
6	613 086 5182	KNOB
7	411 100 0102	SCR S-TPG BIN 2X6
8	613 094 9455	HOLDER
9	613 091 8161	COMPL.IR-4
10	613 086 4994	CABINET.BOTTOM
11	411 022 0907	SCR S-TPG FLT 2X8
12	613 091 5122	TERMINAL.BATTERY
13	613 086 5021	LID.BATTERY
14	613 091 8154	COMPL.IR-3
15	613 087 5181	COMPL.RM-1
16	613 086 5137	BUTTON

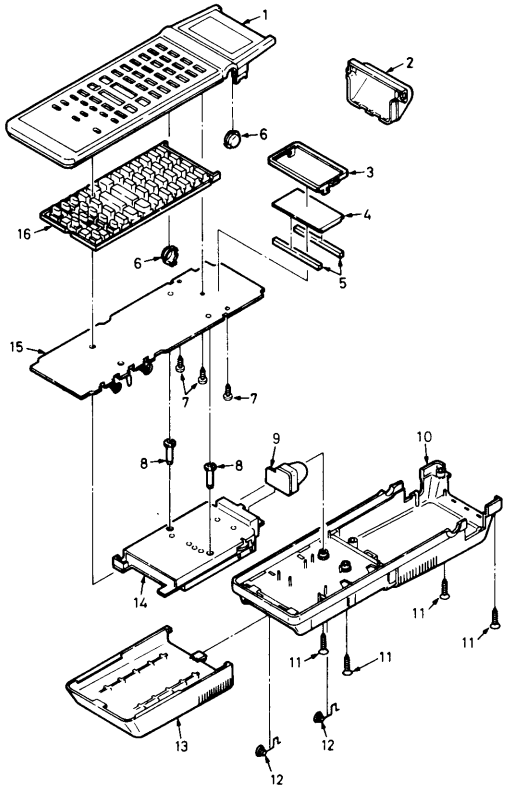

NOTE: Parts order must contain Model Number, Part Number and Description.

DP2FA/EC1F
14311440

REFERENCE No. WM-530238

SANYO

SANYO Electric Co., Ltd.
Osaka, Japan

Jan./'89/2000 NS Printed in Japan

SANYO

Parts List & Circuit Diagrams

Colour Video Cassette Recorder

VHR-D4610E
(U.K.)

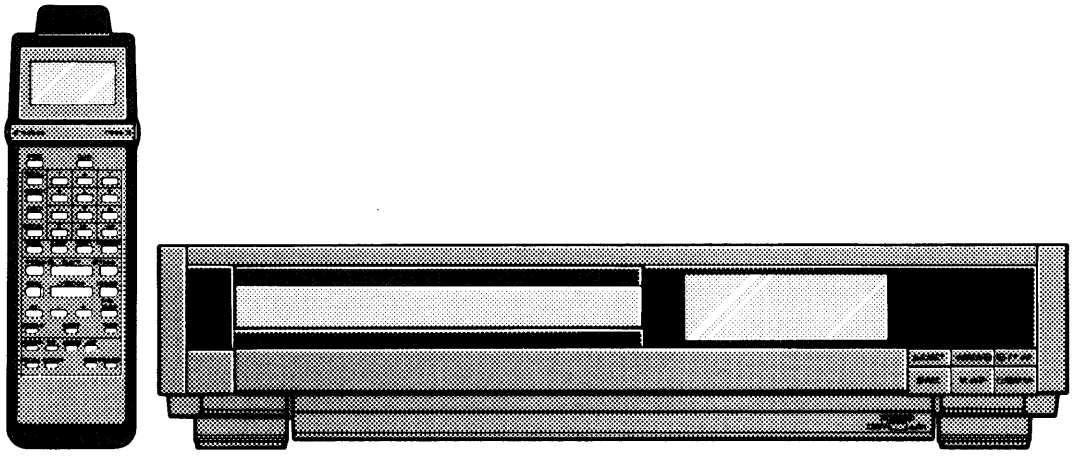

VHS HQ
PAL

Contents

Cabinet & Chassis Parts. 1
Mechanism Parts 1. 2
Mechanism Parts 2. 3
Mechanism Parts 3. 4

Electrical Parts
COMPL, CP-A. 5
COMPL, VD-1 8
COMPL, DM-1 10
COMPL, DM-3 13
COMPL, DM-4 13
COMPL, DM-5 13
COMPL, VP-1. 14
COMPL, AD-1 15
COMPL, SY-2. 15
COMPL, PW-1. 16
COMPL, PW-2. 17
COMPL, PW-3. 17
COMPL IR-1 17
IF PACK 19
COMPL, TM-1 19
COMPL, TM-2 20
COMPL, TM-3 20
Accessories. 21
Packing Materials. 21
Circuit Diagram

Please see other materials with Reference No. given in table below.

Materials	Model No.	Reference No.
Service Manual	VHR-D4610 Series	WM-530078
Mechanism Manual	VHR4100 Series	WM-22534
Training Manual	VHR-4100 Series	WM-22342
Digital Memory Circuit Service Information		WM-530116

PRODUCT SAFETY NOTICE

The components designated by a symbol (⚠) in this schematic diagram designates components whose value are of special significance to product safety. Should any component designated by a symbol need to be replaced, use only the part designated in the Parts List. Do not deviate from the resistance, wattage and voltage ratings shown.

NOTE: Parts order must contain Model Number, Part Number and Description.

DP2FA/EC1F
14311440

REFERENCE No. WM-530077

CABINET & CHASSIS PARTS

LOCATION		PARTS NO.	DESCRIPTION
1		411 021 4005	SCR S-TPG BIN 3X12
2		613 083 0531	COMPL,VP-1
3		613 077 3128	BRACKET,PRIAMP
OR		613 081 3992	BRACKET
4		411 046 9702	SCR PAN+SW+W 3X6
5		613 079 0859	SHIELD
6		613 079 9692	HOLDER(INCLUDE AD-1)
7		613 084 3937	COMPL,AD-1
8		613 079 9708	HOLDER(INCLUDE AD-1)
9		613 087 8908	FLEXIBLE FLAT CABLE
10		411 021 6405	SCR S-TPG BIN 3X8
11		613 081 0410	SHIELD
12		613 081 0441	INSULATOR
13		613 081 0397	SHIELD
14	⚠	613 082 9795	INSULATOR
15		613 089 8982	BRACKET
16		613 081 0434	RADIATOR
17		613 081 0380	BRACKET
18		613 080 0862	COMPL.PW-2
19		613 081 0403	SHIELD
20		613 086 0514	CORD,POWER
21		613 053 6686	FIXER
22		613 085 7972	RADIATOR
23		613 080 0879	COMPL,PW-3
24		613 087 1879	BRACKET
25		411 021 4500	SCR S-TPG BIN 3X16
27		613 081 4906	COMPL,PW-1
28		613 077 3487	BLIND
29		411 021 4104	SCR S-TPG BIN 3X12
30		613 078 9624	COVER,TOP
31		412 024 7604	SPECIAL SCREW
33		613 077 2619	TERMINAL(INCLUDE CP-A)
34		613 077 3159	BRACKET(INCLUDE CP-A)
37		613 084 5870	COMPL,CP-A
38		613 083 0623	COMPL,DM-5
39		411 021 4203	SCR S-TPG BIN 3X12
40		613 079 5564	COMPL,SY-2
42		613 080 7847	COMPL,VD-1
OR		613 086 2020	COMPL,VD-1
43		613 082 5773	HOLDER
44		613 000 1528	TUNER
45		613 086 0453	IF PACK
46		613 079 2358	MODULATOR,RF
OR		613 079 2365	MODULATOR,RF
47		613 082 9863	COMPL,DM-1
48		613 084 2053	COMPL,DM-3
49		613 085 9907	COMPL,DM-4
51		613 081 4753	COMPL,TM-3
52		613 048 6912	BRACKET
53		613 081 5200	COVER,BOTTOM
54		613 084 6723	COMPL,TM-1
55		613 022 0738	BRACKET,CABINET
56		613 085 2359	ASSY,CABINET,FRONT
57		613 042 0183	BADGE
58		613 084 4194	DOOR
59		613 083 0616	COMPL,TM-2
60		613 081 6504	STAND,FRONT
61		613 081 6573	ESCUTCHEON
62		613 081 6405	CABINET,TOP
63		613 081 6429	LID
64		613 081 6627	BUTTON
65		613 081 6702	BRACKET
66		613 081 6412	CABINET,BOTTOM
67		613 088 4435	STAND,BACK RIGHT
68		613 081 6511	STAND,BACK LEFT
69		411 021 4302	SCR S-TPG BIN 3X14
70		613 080 0091	COMPL,IR-1
71		412 031 8502	SPECIAL WASHER
72		613 079 0002	HINGE BUTTON,EJECT
73		613 079 0019	HINGE BUTTON,REW
74		613 079 0026	HINGE BUTTON,FF
75		613 022 0653	HINGE BUTTON,REC
76		613 079 0040	HINGE BUTTON,PLAY
77		613 079 0057	HINGE BUTTON,STOP

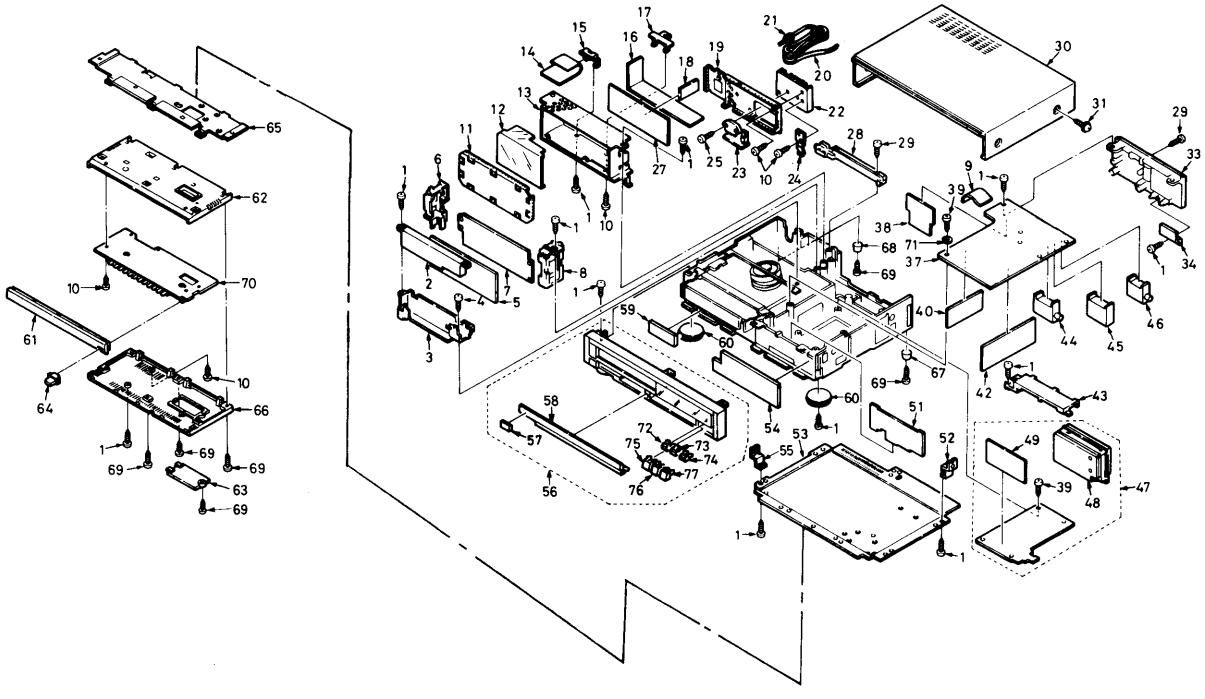

MECHANISM PARTS 1

LOCATION	PARTS NO.	DESCRIPTION
1	613 022 0523	COMPL,CASSETTE MECHA
2	613 022 2572	GEAR,IDLER L
3	613 022 2275	LEVER,DOOR OPENER
4	613 022 0585	LID
5	407 098 3201	PHOTO COUPLE PN150SAN
6	411 015 9801	RING E 2.3
7	613 022 1643	SPRING,LINK L
8	613 022 0073	ASSY,GEAR,LEVER L
9	613 022 2695	RACK
10	613 022 2633	GEAR,LOCK
11	613 021 9916	ASSY,LEVER,PINION
12	613 022 2626	GEAR,PINION
13	613 021 9657	ASSY,BRACKET,GEAR
14	411 027 1305	SCR S-TPG BIN 2.6X4
15	613 006 4479	SPECIAL SWITCH
16	411 106 9208	SCR PAN+SW+W 2X9
17	613 022 0936	HOLDER,TRANSISTOR
18	613 022 2619	GEAR,IDLER
19	613 022 1667	SPRING,GEAR MAIN
20	613 022 2596	GEAR,MAIN
21	613 022 0097	ASSY,GEAR,LEVER R
22	613 022 1674	SPRING,LINK R
23	613 022 2602	GEAR,IDLER R
24	613 022 4064	BOARD,UNDER
25	613 022 2558	GEAR,COUPLE R
26	613 022 0226	ASSY,ROD
27	613 022 2237	LEVER,SAFETY SW
28	613 022 1827	SPRING,SAFETY SW
29	613 022 1803	SPRING,DOOR
30	613 080 2002	CASSETTE DOOR
31	411 001 8702	SCR BIN 3X6
40	613 021 9831	ASSY,LEVER,TENSION
41	613 085 7996	SPRING,LEVER TENSION
42	613 021 9701	ASSY,HOLDER,BAND
43	411 036 2805	SCR PAN+SW+W 2.6X6
44	411 109 1605	WASHER Y 2.6X6X0.25
45	613 078 8375	ASSY,REEL,SUPPLY
46	613 022 0110	ASSY,REEL,TAKE UP
47	412 021 5306	SPECIAL WASHER 3.1X6X0.3T
OR	412 015 8900	SPECIAL WASHER 3.1X6X0.4T
OR	412 015 8504	SPECIAL WASHER 3.1X6X0.5T
48	411 109 1506	WASHER Y 2.1X6X0.25
OR	411 109 1407	WASHER Y 2.1X5X0.25
49	613 085 7231	GEAR,REEL SUPPLY
50	412 026 7305	SPECIAL WASHER 2.6X6X0.25
51	613 022 2480	GEAR,REEL TAKE UP
54	411 031 0905	SCR BIN 2.6X4
56	613 022 0134	ASSY,IDLER
57	613 085 7101	COMPL,IDLER,CLUTCH
58	411 076 5804	SCR TPG BIN 2.6X8
59	407 016 7205	LED LN59
60	613 078 6302	COMPL,MC-4
61	613 021 9985	ASSY,SLIDE,ACT PLATE
62	613 021 9992	ASSY,SLIDE,C BRAKE
63	613 022 1612	SPRING,RETURN SLIDE
64	613 022 1506	SPRING,SUB T
65	613 022 0196	ASSY,BRAKE,SUB T
66	613 077 3647	PULLEY,REEL
67	613 022 1490	SPRING,SUB SUPPLY
68	613 022 2374	SLIDE,ACT BRAKE
69	613 084 8871	BRAKE,SUB SUPPLY
70	613 022 0004	ASSY,SLIDE,M PLATE
71	613 080 9216	ASSY,BRAKE,SUPPLY
72	613 022 1544	SPRING,MAIN BRAKE
OR	613 086 2914	SPRING,MAIN BRAKE
73	613 080 9209	ASSY,BRAKE,TAKE UP
74	411 109 3005	WASHER Y 2.6X5X0.5
75	613 022 2015	LEVER,CONT PLATE
76	411 109 1407	WASHER Y 2.1X5X0.25
77	411 021 7907	SCR S-TPG BIN 4X12
78	412 030 2402	SPECIAL SCREW

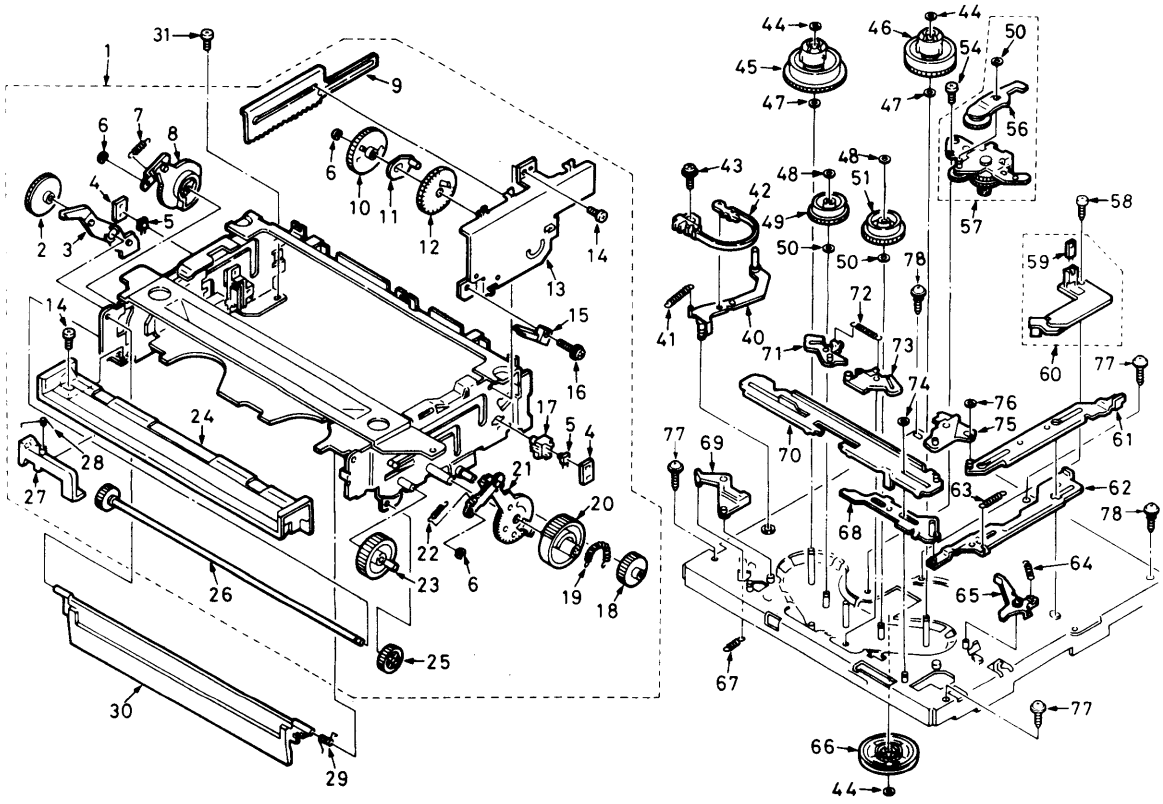

MECHANISM PARTS 2

LOCATION	PARTS NO.	DESCRIPTION
1	613 079 8008	COMPL,CYLINDER,2N2P-D
OR	613 087 6904	COMPL,CYLINDER,2N2P-D
2	411 038 1608	SCR PAN+W 3X8
3	613 079 7995	ASSY,CYLINDER,UPR 2N2P-D
OR	613 087 6898	ASSY,CYLINDER,UPR 2N2P-D
4	613 022 0271	ASSY,CYLINDER,LWR 2
OR	613 077 2138	ASSY,CYLINDER,LWR 2
5	613 081 4036	SPACER,MOTOR
8	613 022 1001	BASE,CYLINDER
9	411 047 7509	SCR PAN+FLG 3X6
10	613 022 4026	STATOR,MOTOR CYL
11	411 047 5000	SCR PAN+FLG 2.6X8
OR	412 030 9708	SPECIAL SCREW 2.6X8
12	411 044 9209	SCR PAN+SW 2.3X8
13	613 022 4019	ROTOR,MOTOR CYL
14	411 044 9001	SCR PAN+SW 2.3X6
15	613 022 1766	SPRING,ADJUST GUIDE
16	613 053 3227	SPECIAL WASHER
17	613 058 3307	TAPE GUIDE
18	412 026 2607	SPECIAL NUT
19	613 085 2434	CAP
20	613 021 9961	ASSY,SLIDE,ACT PINCH
21	613 021 9800	ASSY,LEVER,CAM PINCH
22	411 109 2008	WASHER Y 3.1X8X0.5
23	613 022 1797	SPRING,ACE HEAD
24	613 021 9640	COMPL,BRACKET,HEAD
25	613 051 4615	SPACER
26	412 015 8207	SPECIAL NUT
27	411 120 0007	SCR PAN+SW+W 2.6X5
28	613 022 0752	BRACKET,STOPPER
29	613 022 1575	SPRING,LINK LOCK
30	613 022 1582	SPRING,SLIDE BRAKE
31	613 022 2725	DAMPER
32	613 022 0059	ASSY,SLIDE,CAM
33	412 021 1407	SPECIAL SCREW
34	613 079 1030	DAMPER,MOTOR
35	613 079 0989	PLATE,MOTOR
36	613 079 0736	BRACKET,STAND
37	411 021 3107	SCR S-TPG BIN 2.6X8
38	411 109 1902	WASHER Y 3.1X6X0.5
39	613 077 3579	GEAR,HELICAL
40	613 021 9534	COMPL,SENSOR DEW
41	411 040 2303	SCR PAN 2.6X5
42	613 077 3180	BRACKET,HOLDER
43	411 031 1209	SCR BIN 2.6X5
44	613 079 6868	ASSY,BRACKET,MOTOR
45	613 077 3616	DAMPER,WORM
46	613 021 9527	ASSY,LOADING MOTOR
47	613 079 8992	COMPL,MC-3
48	613 078 7705	ASSY,BRACKET,FRONT
49	613 027 0504	WASHER 4.1X6.5X0.5
50	613 077 3586	GEAR,HELICAL FRONT
51	613 022 2534	GEAR,FRONT LOAD
52	613 021 9824	ASSY,LEVER,FRONT
53	613 022 0011	ASSY,SLIDE,FRONT
54	411 109 3005	WASHER Y 2.6X5X0.5
55	613 022 1636	SPRING,LEVER ACT
56	613 022 1629	SPRING,LEVER LOAD
57	613 079 8985	COMPL,MC-2
57-1	403 001 3108	CERAMIC 0.1U Z 16V,INCLUDE MC-2
57-2	613 009 8309	SOCKET 26P,INCLUDE MC-2
58	613 077 3227	HOLDER,WORM
59	613 027 0627	WASHER 2.1X6X0.5
60	613 078 8344	ASSY,WORM,LOAD
61	613 022 2985	BELT,LOADING
62	411 002 5700	SCR PAN 2.6X12
63	613 077 4361	ROTARY SWITCH
64	613 078 8320	ASSY,WORM,FRONT
65	613 027 0375	WASHER 2.1X4.0X0.13
66	613 053 2381	SPECIAL WASHER
67	411 040 0507	SCR PAN 2.6X3
68	613 022 1483	SPRING,PINCH ROLLER
69	411 109 2107	WASHER Y 3.6X6X0.5
70	613 078 8160	COMPL,LEVER,ACT BRAKE
71	613 022 0158	COMPL,PINCH ROLLER
72	613 022 1568	SPRING,REVIEW LEVER
73	613 021 9886	ASSY,LEVER,REV GUIDE
74	613 022 1919	PLATE,GUIDE
75	613 021 9725	ASSY,BASE,ROLLER S
76	613 021 9732	ASSY,BASE,ROLLER T
77	411 063 0904	SCR SET HEX-SCT 2X3
78	613 022 0233	ASSY,GUIDE,ROLLER
79	412 026 7800	SPECIAL WASHER 0.13T
80	613 080 6703	IMPEDANCE ROLLER
81	411 109 2602	WASHER Y 1.5X4X0.25
83	613 021 9893	ASSY,LEVER,FE HEAD
84	613 022 1698	SPRING,ERASE HEAD
85	411 109 1704	WASHER Y 6.4X10X0.25
86	613 022 1773	SPRING,GUIDE SUPPLY
87	613 022 4224	FTE HEAD

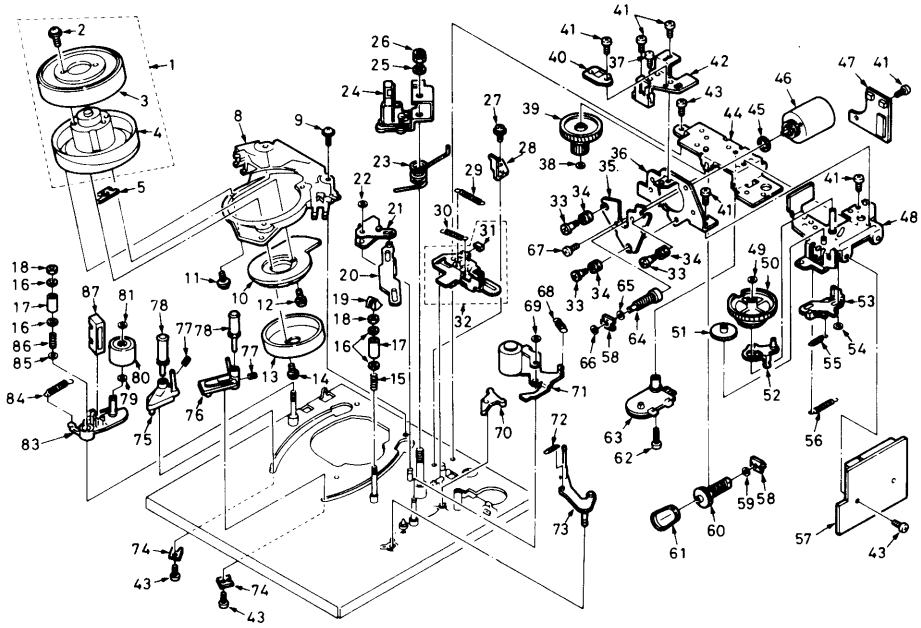

LOCATION	PARTS NO.	DESCRIPTION
MECHANISM PARTS 3		
1	613 022 4491	MOTOR,CAPSTAN
OR	613 080 8929	MOTOR,CAPSTAN
2	613 022 2978	BELT,REEL DRIVE
3	613 021 9848	ASSY,LEVER,CLUTCH
4	411 015 4301	RING CS 3
5	613 079 1023	DAMPER,LEVER CLUTCH
6	613 022 1520	SPRING,LEVER CLUTCH
7	613 022 2053	LEVER,CHANGE CLUTCH
8	613 022 1711	SPRING,CHANGE CLUTCH
9	613 081 7518	ASSY,BRAKE,CAPSTAN
10	613 022 1513	SPRING,CAPSTAN
11	613 022 0837	BRACKET,REINFORCE
12	411 021 3107	SCR S-TPG BIN 2.6X8
13	411 109 2008	WASHER Y 3.1X8X0.5
14	613 021 9978	ASSY,SLIDE,CAM PLATE
15	613 022 2701	CAM,MODE
16	411 109 1902	WASHER Y 3.1X6X0.5
17	613 022 2718	CAM,MAIN
18	613 022 2664	RACK,LOAD
19	411 109 1803	WASHER Y 2.6X6X0.5
20	411 109 2107	WASHER Y 3.6X6X0.5
OR	411 109 2206	WASHER Y 3.6X8X0.5
21	613 021 9794	ASSY,LEVER,CAM LOAD
22	411 047 6809	SCR PAN+FLG 3X4
23	613 021 9763	ASSY,EARTH,CYL
24	613 022 2435	GEAR,LOAD TAKE UP
25	613 022 1551	SPRING,GEAR LOAD T
26	613 021 9879	ASSY,LEVER,LOAD T
27	613 022 2428	GEAR,LOAD SUPPLY
28	613 022 1704	SPRING,GEAR LOAD S
29	613 021 9862	ASSY,LEVER,LOAD S
30	613 022 2039	LEVER,RETURN TENSION
31	613 021 9817	ASSY,LEVER,CONTROL
32	411 022 8903	SCR S-TPG PAN 2.3X12
OR	411 066 7702	SCR TPG PAN 2.3X5
33	411 087 6005	WASHER V 2.6X7.5X0.5
OR	411 087 4902	WASHER V 2.3X6.5X0.5
34	411 040 2303	SCR PAN 2.6X5
35	412 015 8603	SPECIAL WASHER
36	613 022 0066	ASSY,GEAR,FRICTION
37	411 109 1605	WASHER Y 2.6X6X0.25
38	411 102 9905	WASHER Y 3.2X8X1
39	613 079 8121	BRACKET,PULLEY
40	411 100 0300	SCR S-TPG BIN 2.6X5
41	613 078 6548	COMPL,MC-1
41-1	401 024 6700	CARBON 100 JA 1/6W R 2,INCLUDE MC-1
OR	401 012 4404	CARBON 100 JA 1/4W R 2,INCLUDE MC-1
41-2	401 026 0607	CARBON 270 JA 1/6W R 1 R 3, INCLUDE MC-1
OR	401 017 0708	CARBON 270 JA 1/4W R 1 R 3, INCLUDE MC-1
41-3	613 022 4538	SPECIAL,SWITCH,FRONT END INCLUDE MC-1
41-4	613 022 4545	SPECIAL SWITCH,E-P,INCLUDE MC-1
41-5	407 094 1300	PHOTO COUPLE SPI-315-04-C,INCLUDE MC-1
OR	407 043 0101	PHOTO DIODE ON2170-R,INCLUDE MC-1
41-6	613 022 1155	SPACER,PHOTO SENSOR,INCLUDE MC-1

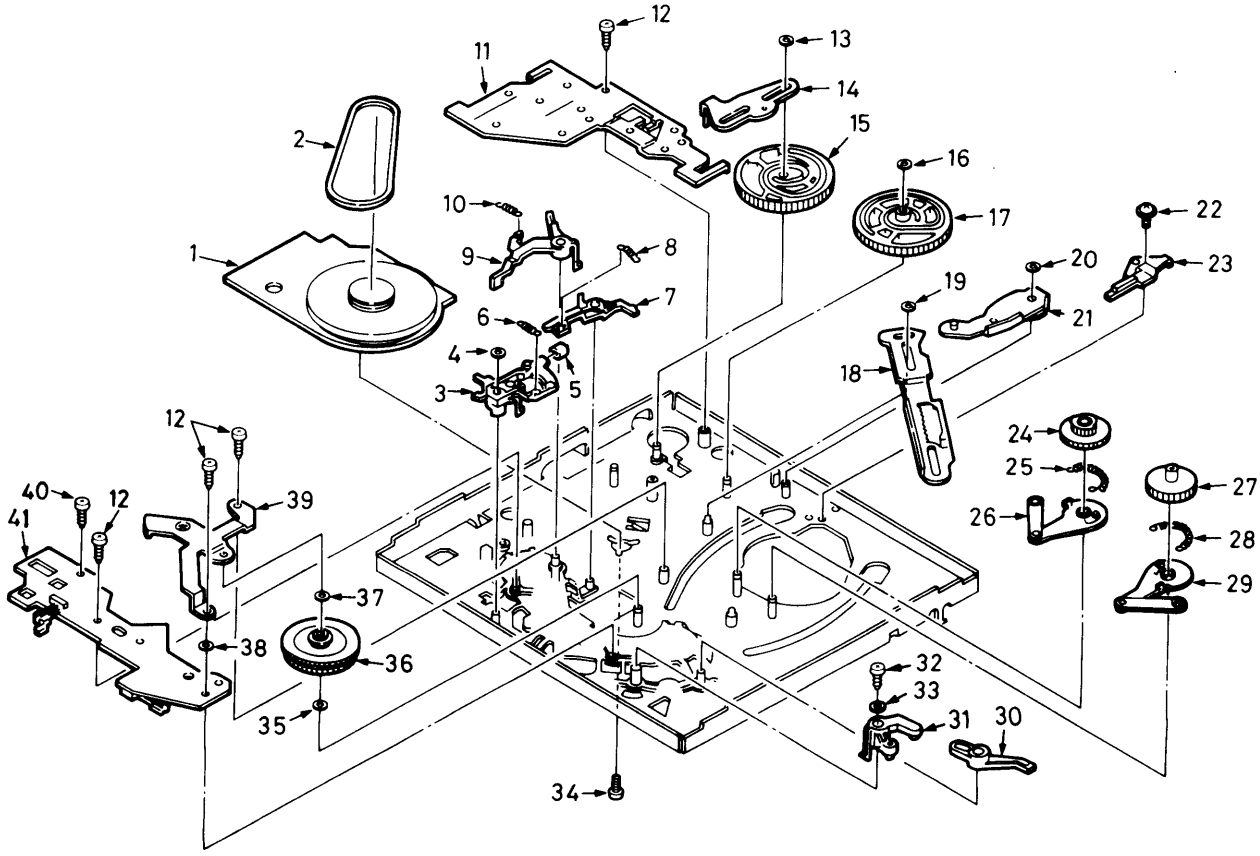

ELECTRICAL PARTS

NOTE;

*Materials of Capacitors and Resistors are abbreviated as follows;

Resistors

MT-FILE	Metal Film Resistor
MT-GLAZE	Metal Glaze Resistor
OXIDE-MT	Oxide Netal Film Resistor

Capacitors

MT-POLYEST	Metallized Polyester Capacitor
MT-COMPO	Metallized Composite Capacitor
TA-SOLID	Tantalum Solid Capacitor
AL-SOLID	Aluminum Solid Capacitor
NP-ELECT	Non-Polarized Electrolytic Capacitor
OS-SOLID	Aluminum Solid Capacitors with Organic Semiconductive Electrolytic Capacitor
DL-ELECT	Double Layered Electrolytic Capacitor

*Tolerance of Capacitor(10pF over) and Resistor are noted with follw symboles.

F ·····±1% G ·····±2% J ·····±5% K ·····±10%
M ·····±20% N ·····±30% Z ·····±80% ·····−20%

LOCATION	PARTS NO.	DESCRIPTION
COMPL,CP-A		
COMPL.NO.	613 084 5870	
VIDEO CIRCUIT(VD-A)		
B1601	405 018 2501	TR 2SC3399-AC
OR	405 001 0408	TR RN1204-TPE4
B1602	405 018 2501	TR 2SC3399-AC
OR	405 001 0408	TR RN1204-TPE4
B1603	405 018 2501	TR 2SC3399-AC
OR	405 001 0408	TR RN1204-TPE4
B1604	405 018 2501	TR 2SC3399-AC
OR	405 001 0408	TR RN1204-TPE4
C1603	403 121 9509	CERAMIC 0.1U Z 50V
C1604	403 042 3006	ELECT 100U M 16V
C1606	403 039 3507	ELECT 470U M 6.3V
C1610	403 043 9601	ELECT 47U M 16V
C1611	403 001 1906	CERAMIC 0.01U M 16V
C1612	403 038 5403	ELECT 22U M 6.3V
C1614	403 001 1906	CERAMIC 0.01U M 16V
C1616	403 001 1906	CERAMIC 0.01U M 16V
C1617	403 001 1906	CERAMIC 0.01U M 16V
CN161	613 009 1635	SOCKET 21P
D1602	407 012 4406	DIODE 1SS133-T-77
OR	407 007 9904	DIODE GMA01-BT
D1603	407 012 4406	DIODE 1SS133
OR	407 007 9904	DIODE GMA01
D1604	407 012 4406	DIODE 1SS133-T-77
OR	407 007 9904	DIODE GMA01-BT
D1605	407 012 4406	DIODE 1SS133-T-77
OR	407 007 9904	DIODE GMA01-BT
D1606	407 012 4406	DIODE 1SS133-T-77
OR	407 007 9904	DIODE GMA01-BT
D1607	407 012 4406	DIODE 1SS133-T-77
OR	407 007 9904	DIODE GMA01-BT
D1610	407 012 4406	DIODE 1SS133-T-77
OR	407 007 9904	DIODE GMA01-BT
L1603	613 015 6730	HF CHOKE 100UH K
L1604	613 015 6730	HF CHOKE 100UH K
Q1601	405 004 4007	TR 2SA608-E-SPA-AC
OR	405 006 1707	TR 2SA933S-TP-Q
Q1602	405 004 4007	TR 2SA608-E-SPA-AC
OR	405 004 4601	TR 2SA608-F-SPA-AC
OR	405 006 1707	TR 2SA933S-TP-Q
OR	405 006 1806	TR 2SA933S-T93-R
Q1603	405 004 4601	TR 2SA608-F-SPA-AC
OR	405 006 1806	TR 2SA933S-T93-R
Q1605	405 004 4007	TR 2SA608-E-SPA-AC
OR	405 004 4601	TR 2SA608-F-SPA-AC
OR	405 006 1707	TR 2SA933S-TP-Q
OR	405 006 1806	TR 2SA933S-T93-R
Q1606	405 019 2005	TR 2SC536-E-SPA-AC
OR	405 019 2807	TR 2SC536-F-SPA-AC
OR	405 011 8401	TR 2SC1740S-DCTP-Q
OR	405 011 8500	TR 2SC1740S-DCTP-R
R1602	401 022 6702	CARBON 75 JA 1/4W
R1609	401 021 8905	CARBON 6.2K JA 1/4W
R1610	401 021 2903	CARBON 5.6K JA 1/4W
R1611	401 021 2903	CARBON 5.6K JA 1/4W
R1612	401 016 4707	CARBON 22K JA 1/4W
R1613	401 021 0602	CARBON 56 JA 1/4W
R1614	401 013 5202	CARBON 1.2K JA 1/4W
R1615	401 021 1807	CARBON 560 JA 1/4W
R1616	401 012 4404	CARBON 100 JA 1/4W
R1617	401 021 1807	CARBON 560 JA 1/4W
R1618	401 022 6702	CARBON 75 JA 1/4W
R1619	401 013 9408	CARBON 1.3K JA 1/4W
R1620	401 021 2903	CARBON 5.6K JA 1/4W
R1621	401 015 2605	CARBON 1.8K JA 1/4W
R1625	401 021 1807	CARBON 560 JA 1/4W
R1626	401 018 2701	CARBON 330 JA 1/4W
R1627	401 012 5609	CARBON 1K JA 1/4W
R1629	401 012 6903	CARBON 10K JA 1/4W
R1630	401 013 5202	CARBON 1.2K JA 1/4W
R1631	401 020 0702	CARBON 470 JA 1/4W
R1632	401 012 4404	CARBON 100 JA 1/4W
R1633	401 012 7009	CARBON 10K JA 1/4W
DIGITAL CIRCUIT(DM-A)		
B4091	405 018 2501	TR 2SC3399-AC
C4011	403 039 2104	ELECT 47U M 6.3V
C4012	403 003 3700	CERAMIC 0.022U Z 25V
C4013	403 041 8804	ELECT 10U M 16V
C4014	403 041 8804	ELECT 10U M 16V
D4051	407 012 4406	DIODE 1SS133-T-77
OR	407 007 9904	DIODE GMA01-BT
D4081	407 012 4406	DIODE 1SS133-T-77
OR	407 007 9904	DIODE GMA01-BT
D4082	407 012 4406	DIODE 1SS133-T-77
OR	407 007 9904	DIODE GMA01-BT
D4091	407 012 4406	DIODE 1SS133-T-77

LOCATION	PARTS NO.	DESCRIPTION
D4091	407 007 9904	DIODE GMA01-BT
D4092	407 012 4406	DIODE 1SS133-T-77
OR	407 007 9904	DIODE GMA01-BT
IC401	409 120 3401	IC LA7221
OR	409 003 4501	IC BA7021
L4011	613 015 6730	HF CHOKE 100UH K
R4011	401 012 9201	CARBON 1M JA 1/4W
R4012	401 016 4707	CARBON 22K JA 1/4W
R4013	401 012 7009	CARBON 10K JA 1/4W
R4014	401 012 9201	CARBON 1M JA 1/4W
R4015	401 016 4707	CARBON 22K JA 1/4W
R4051	401 012 5609	CARBON 1K JA 1/4W
R4092	401 012 6903	CARBON 10K JA 1/4W

AUDIō CIRCUIT(AD-A)

R2505	401 023 1607	CARBON 820 JA 1/4W
R2507	401 012 6903	CARBON 10K JA 1/4W
R2508	401 012 6903	CARBON 10K JA 1/4W
R2509	401 023 1607	CARBON 820 JA 1/4W
R2510	401 015 2605	CARBON 1.8K JA 1/4W
R2551	401 017 1705	CARBON 2.7K JA 1/4W
R2552	401 017 1705	CARBON 2.7K JA 1/4W

SYSTEM CōNTRōL CIRCUIT(SY-A)

B3201	405 063 9708	TR DTC144EL-TL2
C3072	403 121 9509	CERAMIC 0.1U Z 50V
C3073	403 038 1603	ELECT 100U M 6.3V
C3074	403 022 7703	CERAMIC 33P J 50V
C3075	403 022 7703	CERAMIC 33P J 50V
C3076	403 121 9509	CERAMIC 0.1U Z 50V
C3201	403 038 5403	ELECT 22U M 6.3V
CN301	613 009 4735	SOCKET 26P
D3001	407 078 2705	DIODE 1SS244-T-77
D3201	407 007 9904	DIODE GMA01-BT
OR	407 012 4406	DIODE 1SS133-T-77
IC301	410 053 6100	IC LC66516A-3833
IC305	409 157 9407	IC BX7603
R3001	401 012 5609	CARBON 1K JA 1/4W
R3013	401 012 5609	CARBON 1K JA 1/4W
R3014	401 012 5609	CARBON 1K JA 1/4W
R3021	401 012 5609	CARBON 1K JA 1/4W
R3022	401 012 5609	CARBON 1K JA 1/4W
R3023	401 012 5609	CARBON 1K JA 1/4W
R3027	401 012 5609	CARBON 1K JA 1/4W
R3084 ⚠	402 036 4401	FUSIBLE RES 3.3 JA 1/2W
R3091	401 012 8006	CARBON 100K JA 1/4W
R3092	401 012 8006	CARBON 100K JA 1/4W
R3093	401 012 8006	CARBON 100K JA 1/4W
R3094	401 012 8006	CARBON 100K JA 1/4W
R3095	401 012 8006	CARBON 100K JA 1/4W
R3096	401 023 4509	CARBON 820K JA 1/4W
R3097	401 012 5609	CARBON 1K JA 1/4W
R3098	401 012 5609	CARBON 1K JA 1/4W
R3099	401 012 5609	CARBON 1K JA 1/4W
R3100	401 012 5609	CARBON 1K JA 1/4W
R3101	401 012 5609	CARBON 1K JA 1/4W
R3102	401 012 5609	CARBON 1K JA 1/4W
R3111	401 012 5609	CARBON 1K JA 1/4W
R3121	401 014 4006	CARBON 1.5K JA 1/4W
R3122	401 014 4006	CARBON 1.5K JA 1/4W
R3123	401 019 1802	CARBON 3.9K JA 1/4W
R3126	401 012 6903	CARBON 10K JA 1/4W
R3139	401 012 5609	CARBON 1K JA 1/4W
R3140	401 012 5609	CARBON 1K JA 1/4W
R3141	401 012 5609	CARBON 1K JA 1/4W
R3144	401 012 5609	CARBON 1K JA 1/4W
R3145	401 012 5609	CARBON 1K JA 1/4W
R3151	401 020 2805	CARBON 47K JA 1/4W
R3169	401 012 5609	CARBON 1K JA 1/4W
R3170	401 012 5609	CARBON 1K JA 1/4W
R3171	401 012 8006	CARBON 100K JA 1/4W
R3201	401 015 4609	CARBON 180K JA 1/4W
RB304	613 081 7167	RESISTOR PACK 3.9KX5
OR	613 081 7150	RESISTOR PACK 3.9KX5
OR	613 086 7513	R-NETWORK,3.9KX5
XF301	613 016 6869	CERAMIC RESONATOR 4MHZ
OR	613 016 7026	CERAMIC RESONATOR 4MHZ

SERVō CIRCUIT(SV-A)

B3501	405 018 2501	TR 2SC3399-AC
OR	405 000 6104	TR DTC144ES-DCTP
B3601	405 018 2501	TR 2SC3399-AC
OR	405 000 6104	TR DTC144ES-DCTP
B3602	405 000 2205	TR DTA144ES-DCTP
OR	405 003 7603	TR 2SA1345-AC
B3604	405 018 2501	TR 2SC3399-AC
OR	405 000 6104	TR DTC144ES-DCTP
B3605	405 018 2501	TR 2SC3399-AC
OR	405 000 6104	TR DTC144ES-DCTP
C3501	403 059 6502	POLYESTER 0.022U K 50V
C3502	403 002 8508	CERAMIC 0.015U K 25V
C3503	403 001 8806	CERAMIC 6800P K 16V
C3505	403 002 8508	CERAMIC 0.015U K 25V
C3506	403 038 5403	ELECT 22U M 6.3V
C3507	403 038 5403	ELECT 22U M 6.3V
C3508	403 001 5003	CERAMIC 2200P K 16V
C3509	403 001 3801	CERAMIC 1500P K 16V
C3510	403 001 8806	CERAMIC 6800P K 16V
C3511	403 038 5403	ELECT 22U M 6.3V
C3512	403 038 5403	ELECT 22U M 6.3V
C3513	403 057 6801	POLYESTER 0.012U J 50V
C3514	403 071 6207	CERAMIC 220P K 50V
C3515	403 041 9405	ELECT 10U M 16V
C3516	403 050 7102	ELECT 3.3U M 50V
C3517	403 074 9205	CERAMIC 680P K 50V
C3518	403 162 1609	NP-ELECT 33U M 6.3V
C3519	403 069 1207	CERAMIC 1000P K 50V
C3520	403 061 3605	POLYESTER 0.039U J 50V
C3521	403 063 0008	POLYESTER 6800P K 50V
C3522	403 057 2902	POLYESTER 0.1U K 50V
C3523	403 057 9604	POLYESTER 0.12U K 50V
C3526	403 086 2607	NP-ELECT 1U M 50V
C3527	403 001 1609	CERAMIC 0.01U K 16V
C3528	403 048 2508	ELECT 0.22U M 50V
C3529	403 069 1207	CERAMIC 1000P K 50V
C3530	403 049 0800	ELECT 1U M 50V
C3531	403 001 1609	CERAMIC 0.01U K 16V
C3533	403 039 2609	ELECT 47U M 6.3V
C3534	403 121 9509	CERAMIC 0.1U Z 50V
C3537	403 039 2609	ELECT 47U M 6.3V
C3538	403 039 2609	ELECT 47U M 6.3V
C3539	403 004 4607	CERAMIC 0.068U K 25V
C3540	403 063 0107	POLYESTER 6800P K 50V
C3541	403 069 1207	CERAMIC 1000P K 50V

LOCATION	PARTS NO.	DESCRIPTION
C3601	403 057 2902	POLYESTER 0.1U K 50V
C3605	403 001 1609	CERAMIC 0.01U K 16V
C3606	403 086 2607	NP-ELECT 1U M 50V
C3610	403 060 7802	POLYESTER 0.033U J 50V
D3501	407 007 9904	DIODE GMA01-BT
OR	407 012 4406	DIODE 1SS133-T-77
D3502	407 007 9904	DIODE GMA01-BT
OR	407 012 4406	DIODE 1SS133-T-77
D3503	407 007 9904	DIODE GMA01-BT
OR	407 012 4406	DIODE 1SS133-T-77
D3504	407 012 4406	DIODE 1SS133-T-77
OR	407 007 9904	DIODE GMA01-BT
D3505	407 007 9904	DIODE GMA01-BT
OR	407 012 4406	DIODE 1SS133-T-77
D3522	407 007 9904	DIODE GMA01-BT
OR	407 012 4406	DIODE 1SS133-T-77
D3606	407 007 9904	DIODE GMA01-BT
OR	407 012 4406	DIODE 1SS133-T-77
D3615	407 007 9904	DIODE GMA01-BT
OR	407 012 4406	DIODE 1SS133-T-77
D3616	407 007 9904	DIODE GMA01-BT
OR	407 012 4406	DIODE 1SS133-T-77
D3625	407 012 4406	DIODE 1SS133-T-77
OR	407 007 9904	DIODE GMA01-BT
D3626	407 007 9904	DIODE GMA01-BT
OR	407 012 4406	DIODE 1SS133-T-77
IC351	409 154 2906	IC LC7418-8076
IC352	409 159 8606	IC LA7122S
Q3501	405 019 2807	TR 2SC536-F-SPA-AC
OR	405 011 8401	TR 2SC1740S-DCTP-Q
Q3503	405 081 7205	TR 2SD1920-TL2-Q
OR	405 081 7106	TR 2SD1920-TL2-R
OR	405 081 7007	TR 2SD1920-TL2-S
Q3603	405 019 2807	TR 2SC536-F-SPA-AC
OR	405 011 8401	TR 2SC1740S-DCTP-Q
R3501	401 018 4804	CARBON 33K JA 1/4W
R3502	401 012 8006	CARBON 100K JA 1/4W
R3503	401 012 8006	CARBON 100K JA 1/4W
R3506	401 018 5702	CARBON 330K JA 1/4W
R3507	401 014 5102	CARBON 15K JA 1/4W
R3508	401 014 6000	CARBON 150K JA 1/4W
R3509	401 020 2805	CARBON 47K JA 1/4W
R3510	401 020 2805	CARBON 47K JA 1/4W
R3511	401 012 6903	CARBON 10K JA 1/4W
R3512	401 018 5702	CARBON 330K JA 1/4W
R3513	401 017 2702	CARBON 27K JA 1/4W
R3514	401 014 6000	CARBON 150K JA 1/4W
R3516	401 017 3709	CARBON 270K JA 1/4W
R3518	401 016 4707	CARBON 22K JA 1/4W
R3519	401 016 4707	CARBON 22K JA 1/4W
R3520	401 021 9902	CARBON 620K JA 1/4W
R3521	401 022 8508	CARBON 750K JA 1/4W
R3522	401 014 6000	CARBON 150K JA 1/4W
R3523	401 012 8006	CARBON 100K JA 1/4W
R3524	401 012 8006	CARBON 100K JA 1/4W
R3525	401 018 7508	CARBON 360 JA 1/4W
R3526	401 020 7800	CARBON 510 JA 1/4W
R3527	401 020 7800	CARBON 510 JA 1/4W
R3528	401 014 6000	CARBON 150K JA 1/4W
R3529	401 020 2805	CARBON 47K JA 1/4W
R3531	401 012 5609	CARBON 1K JA 1/4W
R3532	401 016 3700	CARBON 2.2K JA 1/4W
R3533	401 016 3700	CARBON 2.2K JA 1/4W
R3535	401 021 2903	CARBON 5.6K JA 1/4W
R3538	401 012 6903	CARBON 10K JA 1/4W
R3539	401 014 4006	CARBON 1.5K JA 1/4W
R3541	401 012 6903	CARBON 10K JA 1/4W
R3542	401 012 6903	CARBON 10K JA 1/4W
R3544	401 012 8006	CARBON 100K JA 1/4W
R3546	401 012 5609	CARBON 1K JA 1/4W
R3547	401 012 5609	CARBON 1K JA 1/4W
R3548	401 012 5609	CARBON 1K JA 1/4W
R3549	401 014 6000	CARBON 150K JA 1/4W
R3551	401 012 5609	CARBON 1K JA 1/4W
R3561	401 012 8006	CARBON 100K JA 1/4W
R3562	401 016 4707	CARBON 22K JA 1/4W
R3563	401 016 0006	CARBON 20K JA 1/4W
R3605	401 012 6903	CARBON 10K JA 1/4W
R3607	401 015 4609	CARBON 180K JA 1/4W
R3609	401 012 6903	CARBON 10K JA 1/4W
R3628	401 012 5609	CARBON 1K JA 1/4W
R3629	401 014 6000	CARBON 150K JA 1/4W
R3632	401 019 8603	CARBON 430K JA 1/4W
R3634	401 013 6308	CARBON 12K JA 1/4W
R3638	401 016 4707	CARBON 22K JA 1/4W
R3639	401 020 1907	CARBON 4.7K JA 1/4W
R3640	401 021 4006	CARBON 56K JA 1/4W
R3642	401 012 6903	CARBON 10K JA 1/4W
R3648	401 012 5609	CARBON 1K JA 1/4W
R3650	401 020 1907	CARBON 4.7K JA 1/4W
R3653	401 016 4707	CARBON 22K JA 1/4W
R3960	401 020 3802	CARBON 470K JA 1/4W
VR351	613 001 9110	SEMI VR 220KB
OR	613 001 9462	SEMI VR 200KB
VR362	613 001 9134	SEMI VR 470KB
OR	613 001 9486	SEMI VR 500KB

POWER SUPPLY CIRCUIT(PW-A)

C5401	403 001 1609	CERAMIC 0.01U K 16V
D5401	407 078 2705	DIODE 1SS244-T-77
D5402	407 053 6209	ZENER DIODE MTZ5.1A-T-77
D5403	407 078 2705	DIODE 1SS244-T-77
D5450	407 078 2705	DIODE 1SS244-T-77
F5401 ⚠	423 011 8405	FUSE 250V0.315A
Q5401	405 007 3106	TR 2SB544-F-MP-AE
Q5402	405 016 9601	TR 2SC3070-AE
Q5403	405 007 3106	TR 2SB544-F-MP-AE
Q5406	405 019 2708	TR 2SC536-F-NP-AA
R5401	401 021 8905	CARBON 6.2K JA 1/4W
R5402	401 016 3700	CARBON 2.2K JA 1/4W
R5403	401 019 7200	CARBON 430 JA 1/4W
R5404	401 021 8905	CARBON 6.2K JA 1/4W
R5405	401 016 3700	CARBON 2.2K JA 1/4W
R5408	401 020 1907	CARBON 4.7K JA 1/4W
R5409	401 020 1907	CARBON 4.7K JA 1/4W
R5450	401 016 2505	CARBON 220 JA 1/4W
R5451	401 016 3700	CARBON 2.2K JA 1/4W
R5452	401 016 2505	CARBON 220 JA 1/4W
R5453	401 018 3708	CARBON 3.3K JA 1/4W

TUNER CIRCUIT(TN-A)

C6001	403 067 5603	MT-COMPO 0.1U J 50V
OR	403 065 8002	MT-POLYEST 0.1U J 63V
C6004	403 067 5603	MT-COMPO 0.1U J 50V
OR	403 065 8002	MT-POLYEST 0.1U J 63V
L6004	613 014 0852	HF CHOKE 10UH K

LOCATION	PARTS NO.	DESCRIPTION
L6006	613 014 0852	HF CHOKE 10UH K
R6001	401 019 0904	CARBON 390 JA 1/4W
R6002	401 019 0904	CARBON 390 JA 1/4W
R6004	401 019 3905	CARBON 390K JA 1/4W
R6005	401 020 3802	CARBON 470K JA 1/4W
R6006	401 012 4404	CARBON 100 JA 1/4W

TIMER CIRCUIT(TM-A)

C7001	403 001 1906	CERAMIC 0.01U M 16V
C7002	403 042 2405	ELECT 100U M 16V
C7003	403 121 9509	CERAMIC 0.1U Z 50V
C7004	403 050 2800	ELECT 22U M 50V
C7005	403 071 2001	CERAMIC 180P K 50V
C7006	403 067 5603	MT-COMPO 0.1U J 50V
OR	403 065 8002	MT-POLYEST 0.1U J 63V
C7007	403 067 7300	MT-COMPO 0.33U J 50V
OR	403 115 1007	MT-POLYEST 0.33U J 63V
D7001	407 007 9904	DIODE GMA01-BT
OR	407 012 4406	DIODE 1SS133-T-77
D7002	407 053 7701	ZENER DIODE MTZ6.8C-T-77
IC701	409 148 5005	IC M6M80021P
OR	409 151 7904	IC M6M80011P
IC702	409 019 6209	IC LA7910
IC703	409 026 8203	IC L5631
OR	409 057 5103	IC UPC574J
Q7001	405 016 5009	TR 2SC2960-F
OR	405 016 5108	TR 2SC2960-G
Q7002	405 006 7006	TR 2SA984K-E-AA
OR	405 006 7204	TR 2SA984K-F-AA
R7001	401 019 1802	CARBON 3.9K JA 1/4W
R7002	401 012 6903	CARBON 10K JA 1/4W
R7003	401 018 4804	CARBON 33K JA 1/4W
R7004	401 012 6903	CARBON 10K JA 1/4W
R7005	401 020 2805	CARBON 47K JA 1/4W
R7006	401 016 4707	CARBON 22K JA 1/4W
R7007	401 020 1907	CARBON 4.7K JA 1/4W
R7008	401 020 0702	CARBON 470 JA 1/4W
R7009	401 021 2903	CARBON 5.6K JA 1/4W
R7010	401 014 5102	CARBON 15K JA 1/4W

RF CONVERTER CIRCUIT(CV-A)

C6601	403 038 1603	ELECT 100U M 6.3V
C6602	403 038 1603	ELECT 100U M 6.3V
D6601	407 004 9709	DIODE DSK10C-BT
OR	407 005 8701	DIODE ERA15-02A-V5
L6601	613 015 6631	HF CHOKE 15UH K
L6602	613 015 6631	HF CHOKE 15UH K

COMPL.VD-1

COMPL.NO.	613 080 7847	
COMPL.NO.	613 086 2020	*MARK NOT USED
B1001	405 003 7207	TR 2SA1342-TB
OR	405 000 1109	TR DTA124EK-T96
B1002	405 018 2006	TR 2SC3396-TB
B1201	405 018 2006	TR 2SC3396-TB
B1202	405 018 2006	TR 2SC3396-TB
B1290	405 018 2501	TR 2SC3399
OR	405 001 0408	TR RN1204

LOCATION	PARTS NO.	DESCRIPTION
C1002	403 134 7509	CERAMIC 5P J 50V
C1003	403 024 7206	CERAMIC 390P J 50V
C1004	403 009 5807	CERAMIC 100P J 50V
C1005	403 026 2902	CERAMIC 47P J 50V
C1006	403 048 6902	ELECT 0.47U M 50V
C1007	403 026 2902	CERAMIC 47P J 50V
C1008	403 017 5004	CERAMIC 200P J 50V (6130807847)
OR	403 011 5000	CERAMIC 120P J 50V (6130862020)
C1009	403 086 5400	NP-ELECT 2.2U M 50V
C1010	403 050 0509	ELECT 2.2U M 50V
C1011	403 048 4809	ELECT 0.33U M 50V
C1012	403 022 8304	CERAMIC 33P J 50V
C1013	403 033 4609	CERAMIC 82P J 50V
C1014	403 009 5807	CERAMIC 100P J 50V
C1016	403 063 2200	POLYESTER 0.068U K 50V
C1017	403 069 5601	CERAMIC 0.01U K 50V
C1018	403 069 5601	CERAMIC 0.01U K 50V
C1019	403 068 0409	CERAMIC 0.1U Z 25V
C1020	403 039 2609	ELECT 47U M 6.3V
C1021	403 050 0509	ELECT 2.2U M 50V
C1022	403 085 4008	NP-ELECT 10U M 16V
C1023	403 050 0509	ELECT 2.2U M 50V
C1024	403 024 2102	CERAMIC 39P J 50V
C1025	403 031 2201	CERAMIC 680P J 50V
C1026	403 048 6902	ELECT 0.47U M 50V
C1027	403 069 5601	CERAMIC 0.01U K 50V
C1028	403 017 1006	CERAMIC 20P J 50V (6130807847)
OR	403 009 5807	CERAMIC 100P J 50V (6130862020)
C1029	403 074 3104	CERAMIC 0.047U Z 50V
C1031	403 004 1002	CERAMIC 0.047U M 25V
C1101	403 069 5601	CERAMIC 0.01U K 50V
C1102	403 041 2109	ELECT 47U M 10V
C1103	403 041 2109	ELECT 47U M 10V
C1104	403 069 5601	CERAMIC 0.01U K 50V
C1105	403 049 0800	ELECT 1U M 50V
C1106	403 022 8304	CERAMIC 33P J 50V
C1107	403 134 7509	CERAMIC 5P J 50V
C1108	403 028 4201	CERAMIC 56P J 50V
C1109	403 051 0607	ELECT 4.7U M 50V
C1110	403 069 5601	CERAMIC 0.01U K 50V
C1111	403 069 5601	CERAMIC 0.01U K 50V
C1112	403 069 5601	CERAMIC 0.01U K 50V
C1113	403 069 5601	CERAMIC 0.01U K 50V
C1201	403 028 0203	CERAMIC 51P J 50V
C1202	403 073 4201	CERAMIC 3900P K 50V
C1203	403 049 0800	ELECT 1U M 50V
C1204	403 012 6907	CERAMIC 15P J 50V
C1205	403 059 6007	POLYESTER 0.022U K 50V
C1206	403 049 0800	ELECT 1U M 50V
C1207	403 024 2102	CERAMIC 39P J 50V
C1208	403 074 3104	CERAMIC 0.047U Z 50V
C1209	403 039 2609	ELECT 47U M 6.3V
C1210	403 028 0203	CERAMIC 51P J 50V
C1211	403 069 5601	CERAMIC 0.01U K 50V
C1212	403 017 5004	CERAMIC 200P J 50V
C1213	403 049 0800	ELECT 1U M 50V
C1214	403 013 3103	CERAMIC 150P J 50V
C1215	403 013 3103	CERAMIC 150P J 50V
C1216	403 002 2902	CERAMIC 0.01U M 25V
C1217	403 074 3104	CERAMIC 0.047U Z 50V
C1218	403 009 5807	CERAMIC 100P J 50V
C1219	403 049 0800	ELECT 1U M 50V
C1220	403 039 2708	ELECT 47U M 6.3V
C1221	403 074 3104	CERAMIC 0.047U Z 50V
C1222	403 069 5601	CERAMIC 0.01U K 50V

LOCATION	PARTS NO.	DESCRIPTION
C1223	403 072 1607	CERAMIC 0.022U K 50V
C1224	403 069 5601	CERAMIC 0.01U K 50V
C1225	403 069 5601	CERAMIC 0.01U K 50V
C1226	403 049 0800	ELECT 1U M 50V
C1227	403 069 5601	CERAMIC 0.01U K 50V
C1228	403 069 5601	CERAMIC 0.01U K 50V
C1229	403 022 2708	CERAMIC 30P J 50V
C1230	403 069 5601	CERAMIC 0.01U K 50V
C1231	403 069 5601	CERAMIC 0.01U K 50V
C1232	403 069 5601	CERAMIC 0.01U K 50V
C1233	403 028 9909	CERAMIC 560P J 50V
C1234	403 069 5601	CERAMIC 0.01U K 50V
C1235	403 069 5700	CERAMIC 0.01U K 50V
C1236	403 069 5601	CERAMIC 0.01U K 50V
C1237	403 013 3103	CERAMIC 150P J 50V
C1238	403 020 8108	CERAMIC 3P C 50V
C1239	403 040 2209	ELECT 22U M 10V
C1290	403 049 0800	ELECT 1U M 50V
C1501	403 049 0800	ELECT 1U M 50V
C1502	403 038 9708	ELECT 330U M 6.3V
C1503	403 047 0604	ELECT 4.7U M 25V
C1504	403 039 2609	ELECT 47U M 6.3V
D1001	407 012 4406	DIODE 1SS133-T-77
OR	407 007 9904	DIODE GMA01-BT
D1003	407 003 3609	DIODE DAN202K-T-96(6130862020)
D1004	407 003 3609	DIODE DAN202K-T-96(6130862020)
D1101	407 070 8408	ZENER DIODE GZS9.1Y-TB
OR	407 053 8906	ZENER DIODE MTZ9.1C-T-77
D1102	407 051 7802	ZENER DIODE GZS7.5Y-BT
OR	407 053 8104	ZENER DIODE MTZ7.5C-T-77
D1501	407 012 4406	DIODE 1SS133-T-77
OR	407 007 9904	DIODE GMA01-BT
D1502	407 051 6706	ZENER DIODE GZS5.1Y-BT
OR	407 053 6407	ZENER DIODE MTZ5.1C-T-77
D1503	407 003 4507	DIODE DAP202K-T-96
DL121	613 077 4118	DELAY,2H
F1001	613 004 5539	LC PACK 4MHZ LPF
F1201	613 079 2402	FILTER 1.4M,4.43M,5.06MHZ
F1202	613 082 5551	FILTER 1.4MHZ LPF
IC101	409 156 6902	IC LA7322-N
IC111	409 148 4800	IC TL8709P
IC121	409 074 5803	IC TA8632N
J1051	401 035 4108	MT-GLAZE 0.000 ZA 1/8W*
J1052	401 037 5004	MT-GLAZE 0.000 ZA 1/10W*
J1053	401 035 4108	MT-GLAZE 0.000 ZA 1/8W*
J1054	401 035 4108	MT-GLAZE 0.000 ZA 1/8W
J1055	401 037 5004	MT-GLAZE 0.000 ZA 1/10W*
J1056	401 035 4108	MT-GLAZE 0.000 ZA 1/8W*
J1057	401 037 5004	MT-GLAZE 0.000 ZA 1/10W
J1058	401 037 5004	MT-GLAZE 0.000 ZA 1/10W*
J1059	401 035 4108	MT-GLAZE 0.000 ZA 1/8W*
J1060	401 035 4108	MT-GLAZE 0.000 ZA 1/8W*
J1061	401 035 4108	MT-GLAZE 0.000 ZA 1/8W*
J1062	401 037 5004	MT-GLAZE 0.000 ZA 1/10W*
J1063	401 037 5004	MT-GLAZE 0.000 ZA 1/10W*
J1064	401 035 4108	MT-GLAZE 0.000 ZA 1/8W*
J1065	401 037 5004	MT-GLAZE 0.000 ZA 1/10W*
J1066	401 035 4108	MT-GLAZE 0.000 ZA 1/8W
J1067	401 035 4108	MT-GLAZE 0.000 ZA 1/8W*
J1068	401 035 4108	MT-GLAZE 0.000 ZA 1/8W*
J1069	401 037 5004	MT-GLAZE 0.000 ZA 1/10W*
J1070	401 035 4108	MT-GLAZE 0.000 ZA 1/8W*
J1071	401 035 4108	MT-GLAZE 0.000 ZA 1/8W*
J1073	401 037 5004	MT-GLAZE 0.000 ZA 1/10W*

LOCATION	PARTS NO.	DESCRIPTION
J1074	401 035 4108	MT-GLAZE 0.000 ZA 1/8W*
J1075	401 035 4108	MT-GLAZE 0.000 ZA 1/8W*
J1076	401 035 4108	MT-GLAZE 0.000 ZA 1/8W*
J1077	401 037 5004	MT-GLAZE 0.000 ZA 1/10W*
J1078	401 037 5004	MT-GLAZE 0.000 ZA 1/10W*
J1080	401 037 5004	MT-GLAZE 0.000 ZA 1/10W*
J1081	401 037 5004	MT-GLAZE 0.000 ZA 1/10W
J1082	401 037 5004	MT-GLAZE 0.000 ZA 1/10W
J1083	401 037 5004	MT-GLAZE 0.000 ZA 1/10W*
J1084	401 037 5004	MT-GLAZE 0.000 ZA 1/10W*
J1085	401 037 5004	MT-GLAZE 0.000 ZA 1/10W*
J1086	401 037 5004	MT-GLAZE 0.000 ZA 1/10W*
J1087	401 037 5004	MT-GLAZE 0.000 ZA 1/10W*
J1088	401 037 5004	MT-GLAZE 0.000 ZA 1/10W*
L1001	613 014 1187	HF CHOKE 68UH J
L1003	613 014 0975	HF CHOKE 100UH K
L1101	613 014 0944	HF CHOKE 56UH K
L1102	613 014 0913	HF CHOKE 33UH K
L1201	613 014 1118	HF CHOKE 18UH J
L1202	613 014 1088	HF CHOKE 10UH J
L1203	613 014 0999	HF CHOKE 150UH K
L1204	613 014 0906	HF CHOKE 27UH K
L1205	613 014 0876	HF CHOKE 15UH K
Q1001	405 001 9906	TR 2SA1037K-T96-FQ
OR	405 002 6508	TR 2SA1179-M5-TB
OR	405 002 6706	TR 2SA1179-M6-TB
OR	405 002 0001	TR 2SA1037K-FR-T96
Q1002	405 014 4004	TR 2SC2412K-T96-BQ
OR	405 015 8407	TR 2SC2812-L5-TB
OR	405 015 8704	TR 2SC2812-L6-TB
OR	405 014 4103	TR 2SC2412K-BR-T96
Q1003	405 014 4004	TR 2SC2412K-T96-BQ
OR	405 015 8407	TR 2SC2812-L5-TB
OR	405 015 8704	TR 2SC2812-L6-TB
OR	405 014 4103	TR 2SC2412K-BR-T96
Q1101	405 001 9906	TR 2SA1037K-T96-FQ
OR	405 002 6508	TR 2SA1179-M5-TB
OR	405 002 6706	TR 2SA1179-M6-TB
OR	405 002 0001	TR 2SA1037K-FR-T96
Q1102	405 001 9906	TR 2SA1037K-T96-FQ
OR	405 002 6508	TR 2SA1179-M5-TB
OR	405 002 6706	TR 2SA1179-M6-TB
OR	405 002 0001	TR 2SA1037K-FR-T96
Q1201	405 014 4004	TR 2SC2412K-T96-BQ
OR	405 015 8407	TR 2SC2812-L5-TB
OR	405 015 8704	TR 2SC2812-L6-TB
OR	405 014 4103	TR 2SC2412K-BR-T96
Q1202	405 001 9906	TR 2SA1037K-T96-FQ
OR	405 002 6508	TR 2SA1179-M5-TB
OR	405 002 6706	TR 2SA1179-M6-TB
OR	405 002 0001	TR 2SA1037K-FR-T96
Q1203	405 014 4004	TR 2SC2412K-T96-BQ
OR	405 015 8407	TR 2SC2812-L5-TB
OR	405 015 8704	TR 2SC2812-L6-TB
OR	405 014 4103	TR 2SC2412K-BR-T96
Q1204	405 014 4004	TR 2SC2412K-T96-BQ
OR	405 015 8407	TR 2SC2812-L5-TB
OR	405 015 8704	TR 2SC2812-L6-TB
OR	405 014 4103	TR 2SC2412K-BR-T96
Q1205	405 014 4004	TR 2SC2412K-T96-BQ
OR	405 015 8407	TR 2SC2812-L5-TB
OR	405 015 8704	TR 2SC2812-L6-TB
OR	405 014 4103	TR 2SC2412K-BR-T96
Q1206	405 014 4004	TR 2SC2412K-T96-BQ
OR	405 015 8407	TR 2SC2812-L5-TB
OR	405 015 8704	TR 2SC2812-L6-TB
OR	405 014 4103	TR 2SC2412K-BR-T96

LOCATION	PARTS NO.	DESCRIPTION
Q1501	405 043 6000	TR 2SC3807
Q1502	405 006 6504	TR 2SA984-E-AA
OR	405 006 6702	TR 2SA984-F-AA
Q1503	405 014 4004	TR 2SC2412K-T96-BQ
OR	405 015 8407	TR 2SC2812-L5-TB
OR	405 015 8704	TR 2SC2812-L6-TB
OR	405 014 4103	TR 2SC2412K-BR-T96
Q1504	405 006 6504	TR 2SA984-E-AA
OR	405 006 6702	TR 2SA984-F-AA
Q1505	405 009 7003	TR 2SB985-T-AE
Q1506	405 019 2005	TR 2SC536-E-SPA-AC
OR	405 019 2807	TR 2SC536-F-SPA-AC
OR	405 011 8401	TR 2SC1740S-DCTP-Q
OR	405 011 8500	TR 2SC1740S-DCTP-R
Q1507	405 006 6504	TR 2SA984-E-AA
OR	405 006 6702	TR 2SA984-F-AA
Q1508	405 019 3903	TR 2SC536-G-SPA-AC
OR	405 019 2807	TR 2SC536-F-SPA-AC
OR	405 011 8500	TR 2SC1740S-DCTP-R
OR	405 011 8609	TR 2SC1740S-DCTP-S
R1001	401 037 5400	MT-GLAZE 1K JA 1/10W*
R1002	401 038 2101	MT-GLAZE 2.7K JA 1/10W*
R1003	401 038 9001	MT-GLAZE 680 JA 1/10W*
R1004	401 038 7601	MT-GLAZE 560 JA 1/10W*
R1005	401 037 5806	MT-GLAZE 1M JA 1/10W
R1006	401 037 5400	MT-GLAZE 1K JA 1/10W*
R1007	401 038 3009	MT-GLAZE 3K JA 1/10W*
R1008	401 038 6406	MT-GLAZE 4.7K JA 1/10W*
R1009	401 039 0908	MT-GLAZE 910 JA 1/10W*
R1010	401 038 0107	MT-GLAZE 2K JA 1/10W*
R1011	401 037 9408	MT-GLAZE 180K JA 1/10W*
R1012	401 037 5806	MT-GLAZE 1M JA 1/10W
R1013	401 038 9704	MT-GLAZE 7.5K JA 1/10W*
R1014	401 039 0403	MT-GLAZE 8.2K JA 1/10W*
R1015	401 037 6704	MT-GLAZE 1.2K JA 1/10W*
R1018	401 038 3702	MT-GLAZE 33K JA 1/10W*
R1019	401 037 8104	MT-GLAZE 150K JA 1/10W*
R1020	401 022 1806	CARBON 680 JA 1/4W
R1021	401 037 5400	MT-GLAZE 1K JA 1/10W*
R1022	401 037 8005	MT-GLAZE 15K JA 1/10W*
R1023	401 038 3108	MT-GLAZE 30K JA 1/10W*
R1024	401 037 5400	MT-GLAZE 1K JA 1/10W*
R1025	401 037 5400	MT-GLAZE 1K JA 1/10W*
R1026	401 038 0701	MT-GLAZE 2.2K JA 1/10W
R1027	401 038 6604	MT-GLAZE 470K JA 1/10W
R1028	401 035 4900	MT-GLAZE 1K JA 1/8W*
R1029	401 016 3700	CARBON 2.2K JA 1/4W
R1030	401 035 4108	MT-GLAZE 0.000 ZA 1/8W*
R1079	401 037 5004	MT-GLAZE 0.000 ZA 1/10W*
R1101	401 020 7404	CARBON 51 JA 1/4W
R1102	401 021 1807	CARBON 560 JA 1/4W
R1103	401 037 5400	MT-GLAZE 1K JA 1/10W*
R1104	401 037 5400	MT-GLAZE 1K JA 1/10W*
R1105	401 038 0701	MT-GLAZE 2.2K JA 1/10W*
R1106	401 020 7404	CARBON 51 JA 1/4W
R1107	401 019 9501	CARBON 47 JA 1/4W
R1201	401 037 5400	MT-GLAZE 1K JA 1/10W*
R1202	401 038 6406	MT-GLAZE 4.7K JA 1/10W
		(6130807847)
OR	401 038 6505	MT-GLAZE 47K JA 1/10W
		(6130862020)
R1203	401 038 5102	MT-GLAZE 3.9K JA 1/10W*
R1204	401 035 5204	MT-GLAZE 10K JA 1/8W*
R1205	401 038 6406	MT-GLAZE 4.7K JA 1/10W*
R1206	401 037 5400	MT-GLAZE 1K JA 1/10W*
R1207	401 038 3801	MT-GLAZE 330K JA 1/10W
R1208	401 038 3207	MT-GLAZE 300K JA 1/10W
R1209	401 038 3702	MT-GLAZE 33K JA 1/10W*

LOCATION	PARTS NO.	DESCRIPTION
R1210	401 038 3009	MT-GLAZE 3K JA 1/10W*
R1211	401 038 0107	MT-GLAZE 2K JA 1/10W*
R1212	401 038 3009	MT-GLAZE 3K JA 1/10W*
R1213	401 038 6307	MT-GLAZE 470 JA 1/10W*
R1214	401 037 5400	MT-GLAZE 1K JA 1/10W*
R1215	401 037 5400	MT-GLAZE 1K JA 1/10W*
R1216	401 037 7909	MT-GLAZE 1.5K JA 1/10W
R1217	401 038 3504	MT-GLAZE 330 JA 1/10W
R1218	401 012 5609	CARBON 1K JA 1/4W
R1219	401 037 8005	MT-GLAZE 15K JA 1/10W*
R1220	401 037 8005	MT-GLAZE 15K JA 1/10W*
R1221	401 038 2002	MT-GLAZE 270 JA 1/10W*
R1222	401 037 7909	MT-GLAZE 1.5K JA 1/10W*
R1223	401 036 5104	MT-GLAZE 33K JA 1/8W*
R1224	401 038 6307	MT-GLAZE 470 JA 1/10W*
R1225	401 037 7909	MT-GLAZE 1.5K JA 1/10W*
R1226	401 038 3603	MT-GLAZE 3.3K JA 1/10W*
R1227	401 037 8609	MT-GLAZE 1.6K JA 1/10W*
R1229	401 038 7601	MT-GLAZE 560 JA 1/10W
R1230	401 037 5400	MT-GLAZE 1K JA 1/10W*
R1231	401 038 7601	MT-GLAZE 560 JA 1/10W*
R1232	401 037 5400	MT-GLAZE 1K JA 1/10W*
R1233	401 037 8005	MT-GLAZE 15K JA 1/10W*
R1234	401 037 5400	MT-GLAZE 1K JA 1/10W*
R1235	401 035 6607	MT-GLAZE 120 JA 1/8W
R1236	401 035 4900	MT-GLAZE 1K JA 1/8W*
R1237	401 038 9001	MT-GLAZE 680 JA 1/10W*
R1238	401 038 9001	MT-GLAZE 680 JA 1/10W*
R1241	401 037 5608	MT-GLAZE 10K JA 1/10W*
R1242	401 038 3603	MT-GLAZE 3.3K JA 1/10W*
R1245	401 021 7908	CARBON 62 JA 1/4W
R1501	401 036 8105	MT-GLAZE 470 JA 1/8W
R1502	401 038 2101	MT-GLAZE 2.7K JA 1/10W*
R1503	401 038 6406	MT-GLAZE 4.7K JA 1/10W*
R1504	401 038 6505	MT-GLAZE 47K JA 1/10W*
R1505	401 038 6505	MT-GLAZE 47K JA 1/10W*
R1506	401 038 2101	MT-GLAZE 2.7K JA 1/10W*
R1507	401 038 2101	MT-GLAZE 2.7K JA 1/10W*
R1508	401 036 2806	MT-GLAZE 2.7K JA 1/8W*
R1509	401 036 1403	MT-GLAZE 220 JA 1/8W
R1510	401 035 9301	MT-GLAZE 1.8K JA 1/8W*
R1511	401 038 6505	MT-GLAZE 47K JA 1/10W*
R1512	401 020 2805	CARBON 47K JA 1/4W
R1513	401 038 6406	MT-GLAZE 4.7K JA 1/10W*
R1514	401 038 9308	MT-GLAZE 68K JA 1/10W*
R1515	401 038 6406	MT-GLAZE 4.7K JA 1/10W*
R1516	401 038 6406	MT-GLAZE 4.7K JA 1/10W*
VR101	613 001 9424	SEMI VR 20KB
OR	613 001 9059	SEMI VR 22KB
VR102	613 001 9424	SEMI VR 20KB
OR	613 001 9059	SEMI VR 22KB
VR103	613 001 9394	SEMI VR 3KB
OR	613 001 9004	SEMI VR 3.3KB
VR104	613 001 9417	SEMI VR 10KB
OR	613 001 9035	SEMI VR 10KB
VR111	613 001 9370	SEMI VR 1KB
OR	613 001 8977	SEMI VR 1KB
VR121	613 001 9448	SEMI VR 50KB
OR	613 001 9073	SEMI VR 47KB
X1201	613 002 7818	CRYSTAL 4.433619MHZ 16PF
OR	613 002 7900	CRYSTAL 4.433619MHZ
COMPL.DM-1		
COMPL.NO.	613 082 9863	
B4701	405 018 1900	TR 2SC3395-TB
B4731	405 018 2402	TR 2SC3398-TB

LOCATION	PARTS NO.	DESCRIPTION
B4786	405 018 2402	TR 2SC3398-TB
B4806	405 018 2402	TR 2SC3398-TB
B4807	405 018 2402	TR 2SC3398-TB
B4891	405 018 2402	TR 2SC3398-TB
B4892	405 018 1900	TR 2SC3395-TB
C4701	403 030 6903	CERAMIC 68P J 50V
C4702	403 018 7403	CERAMIC 220P J 50V
C4703	403 049 0800	ELECT 1U M 50V
C4704	403 073 1200	CERAMIC 0.033U K 50V
C4705	403 049 0800	ELECT 1U M 50V
C4706	403 074 3104	CERAMIC 0.047U Z 50V
C4707	403 069 5601	CERAMIC 0.01U K 50V
C4708	403 049 0800	ELECT 1U M 50V
C4709	403 073 1200	CERAMIC 0.033U K 50V
C4710	403 018 7403	CERAMIC 220P J 50V
C4712	403 031 2102	CERAMIC 680P J 50V
C4713	403 010 1201	CERAMIC 1000P J 50V
C4715	403 011 4904	CERAMIC 120P J 50V
C4716	403 048 2508	ELECT 0.22U M 50V
C4717	403 075 2205	CERAMIC 0.068U K 50V
C4718	403 075 2205	CERAMIC 0.068U K 50V
C4719	403 011 4904	CERAMIC 120P J 50V
C4720	403 048 2508	ELECT 0.22U M 50V
C4721	403 010 1201	CERAMIC 1000P J 50V
C4722	403 031 2102	CERAMIC 680P J 50V
C4723	403 038 6707	ELECT 220U M 6.3V
C4729	403 069 5601	CERAMIC 0.01U K 50V
C4730	403 040 8003	ELECT 33U M 10V
C4731	403 068 0409	CERAMIC 0.1U Z 25V
C4732	403 012 6808	CERAMIC 15P J 50V
C4733	403 105 9402	CERAMIC 10P J 50V
C4735	403 014 9203	CERAMIC 180P J 50V
C4736	403 069 5601	CERAMIC 0.01U K 50V
C4737	403 049 0800	ELECT 1U M 50V
C4738	403 069 5601	CERAMIC 0.01U K 50V
C4739	403 046 2104	ELECT 3.3U M 25V
C4740	403 075 2205	CERAMIC 0.068U K 50V
C4741	403 049 0800	ELECT 1U M 50V
C4742	403 041 9405	ELECT 10U M 16V
C4743	403 069 5601	CERAMIC 0.01U K 50V
C4745	403 012 6808	CERAMIC 15P J 50V
C4746	403 048 6902	ELECT 0.47U M 50V
C4747	403 026 7501	CERAMIC 470P J 50V
C4748	403 042 8308	ELECT 22U M 16V
C4749	403 047 0604	ELECT 4.7U M 25V
C4750	403 047 0604	ELECT 4.7U M 25V
C4751	403 048 2508	ELECT 0.22U M 50V
C4753	403 049 0800	ELECT 1U M 50V
C4754	403 086 2904	NP-ELECT 1U M 50V
C4755	403 012 6808	CERAMIC 15P J 50V
C4756	403 049 0800	ELECT 1U M 50V
C4757	403 049 0800	ELECT 1U M 50V
C4758	403 069 5601	CERAMIC 0.01U K 50V
C4759	403 074 3104	CERAMIC 0.047U Z 50V
C4760	403 039 2609	ELECT 47U M 6.3V
C4761	403 074 3104	CERAMIC 0.047U Z 50V
C4762	403 039 2609	ELECT 47U M 6.3V
C4763	403 069 5601	CERAMIC 0.01U K 50V
C4764	403 165 4508	CERAMIC 0.15U K 16V
C4765	403 074 1902	CERAMIC 0.047U K 50V
C4766	403 049 0800	ELECT 1U M 50V
C4768	403 075 2304	CERAMIC 0.068U Z 50V
C4769	403 049 0800	ELECT 1U M 50V
C4770	403 010 1201	CERAMIC 1000P J 50V
C4771	403 069 5601	CERAMIC 0.01U K 50V
C4772	403 069 5601	CERAMIC 0.01U K 50V
C4773	403 069 5601	CERAMIC 0.01U K 50V
C4774	403 069 5601	CERAMIC 0.01U K 50V
C4775	403 049 0800	ELECT 1U M 50V
C4776	403 074 3104	CERAMIC 0.047U Z 50V
C4777	403 039 2609	ELECT 47U M 6.3V
C4778	403 069 5601	CERAMIC 0.01U K 50V
C4779	403 049 0800	ELECT 1U M 50V
C4780	403 069 5601	CERAMIC 0.01U K 50V
C4781	403 028 9800	CERAMIC 560P J 50V
C4782	403 069 5601	CERAMIC 0.01U K 50V
C4783	403 030 6903	CERAMIC 68P J 50V
C4785	403 074 3104	CERAMIC 0.047U Z 50V
C4806	403 030 6903	CERAMIC 68P J 50V
C4807	403 012 2800	CERAMIC 130P J 50V
C4808	403 042 8308	ELECT 22U M 16V
C4809	403 030 6903	CERAMIC 68P J 50V
C4810	403 012 2800	CERAMIC 130P J 50V
C4813	403 074 3104	CERAMIC 0.047U Z 50V
C4868	403 072 3403	CERAMIC 0.022U Z 50V
C4869	403 072 3403	CERAMIC 0.022U Z 50V
C4870	403 072 3403	CERAMIC 0.022U Z 50V
C4871	403 072 3403	CERAMIC 0.022U Z 50V
C4873	403 074 3104	CERAMIC 0.047U Z 50V
C4874	403 038 6707	ELECT 220U M 6.3V
C4891	403 074 3104	CERAMIC 0.047U Z 50V
C4892	403 039 2609	ELECT 47U M 6.3V
CT471	613 002 6255	TRIMMER
D4731	407 004 0706	DIODE DCB015-TB
D4761	407 004 0201	DIODE DCA015-TB
D4786	407 012 4000	DIODE 1SS123-T1B
D4811	407 004 0706	DIODE DCB015-TB
D4891	407 004 0201	DIODE DCA015-TB
IC472	409 052 1902	IC TC74HC04F
OR	409 111 7807	IC MN74HCU04S
IC473	409 133 1104	IC LA7400
IC474	409 155 3209	IC LA7402
IC477	409 115 3300	IC M51271FP
IC480	409 155 7603	IC TC4S30F(TE85L)
J4701	401 037 5004	MT-GLAZE 0.000 ZA 1/10W
J4702	401 037 5004	MT-GLAZE 0.000 ZA 1/10W
J4703	401 037 5004	MT-GLAZE 0.000 ZA 1/10W
J4704	401 037 5004	MT-GLAZE 0.000 ZA 1/10W
J4707	401 037 5004	MT-GLAZE 0.000 ZA 1/10W
J4708	401 037 5004	MT-GLAZE 0.000 ZA 1/10W
J4709	401 037 5004	MT-GLAZE 0.000 ZA 1/10W
J4713	401 037 5004	MT-GLAZE 0.000 ZA 1/10W
J4714	401 037 5004	MT-GLAZE 0.000 ZA 1/10W
J4715	401 037 5004	MT-GLAZE 0.000 ZA 1/10W
J4731	401 037 5004	MT-GLAZE 0.000 ZA 1/10W
J4732	401 035 4108	MT-GLAZE 0.000 ZA 1/8W
J4733	401 037 5004	MT-GLAZE 0.000 ZA 1/10W
J4734	401 037 5004	MT-GLAZE 0.000 ZA 1/10W
J4735	401 037 5004	MT-GLAZE 0.000 ZA 1/10W
J4736	401 037 5004	MT-GLAZE 0.000 ZA 1/10W
J4737	401 037 5004	MT-GLAZE 0.000 ZA 1/10W
J4751	401 037 5004	MT-GLAZE 0.000 ZA 1/10W
J4752	401 035 4108	MT-GLAZE 0.000 ZA 1/8W
J4753	401 037 5004	MT-GLAZE 0.000 ZA 1/10W
L4702	613 015 6730	HF CHOKE 100UH K
L4732	613 014 1194	HF CHOKE 82UH J
L4733	613 015 6730	HF CHOKE 100UH K
L4734	613 014 1194	HF CHOKE 82UH J
L4761	613 015 6730	HF CHOKE 100UH K
L4791	613 015 6730	HF CHOKE 100UH K
Q4731	405 014 4400	TR 2SC2412K-T96-Q

LOCATION	PARTS NO.	DESCRIPTION
Q4731	405 015 8407	TR 2SC2812-L5-TB
OR	405 015 8704	TR 2SC2812-L6-TB
OR	405 014 4509	TR 2SC2412K-T96-R
Q4732	405 014 4400	TR 2SC2412K-T96-Q
OR	405 015 8407	TR 2SC2812-L5-TB
OR	405 015 8704	TR 2SC2812-L6-TB
OR	405 014 4509	TR 2SC2412K-T96-R
Q4785	405 002 0209	TR 2SA1037K-T96-Q
OR	405 002 0308	TR 2SA1037K-T96-R
OR	405 002 6508	TR 2SA1179-M5-TB
OR	405 002 6706	TR 2SA1179-M6-TB
Q4786	405 015 8407	TR 2SC2812-L5-TB
OR	405 015 8704	TR 2SC2812-L6-TB
OR	405 014 4509	TR 2SC2412K-T96-R
OR	405 014 4400	TR 2SC2412K-T96-Q
Q4787	405 002 0209	TR 2SA1037K-T96-Q
OR	405 002 0308	TR 2SA1037K-T96-R
OR	405 002 6508	TR 2SA1179-M5-TB
OR	405 002 6706	TR 2SA1179-M6-TB
Q4788	405 015 8407	TR 2SC2812-L5-TB
OR	405 015 8704	TR 2SC2812-L6-TB
OR	405 014 4509	TR 2SC2412K-T96-R
OR	405 014 4400	TR 2SC2412K-T96-Q
Q4789	405 002 0209	TR 2SA1037K-T96-Q
OR	405 002 0308	TR 2SA1037K-T96-R
OR	405 002 6508	TR 2SA1179-M5-TB
OR	405 002 6706	TR 2SA1179-M6-TB
Q4790	405 002 0209	TR 2SA1037K-T96-Q
OR	405 002 0308	TR 2SA1037K-T96-R
OR	405 002 6508	TR 2SA1179-M5-TB
OR	405 002 6706	TR 2SA1179-M6-TB
Q4806	405 078 0400	TR 2SC2413K-T96-P
OR	405 035 6100	TR 2SC2413K-T96-Q
OR	405 015 9701	TR 2SC2814-F4-TB
OR	405 015 9909	TR 2SC2814-F5-TB
Q4807	405 078 0400	TR 2SC2413K-T96-P
OR	405 035 6100	TR 2SC2413K-T96-Q
OR	405 015 9701	TR 2SC2814-F4-TB
OR	405 015 9909	TR 2SC2814-F5-TB
Q4808	405 014 4400	TR 2SC2412K-T96-Q
OR	405 015 8407	TR 2SC2812-L5-TB
OR	405 015 8704	TR 2SC2812-L6-TB
OR	405 014 4509	TR 2SC2412K-T96-R
Q4809	405 014 4400	TR 2SC2412K-T96-Q
OR	405 015 8407	TR 2SC2812-L5-TB
OR	405 015 8704	TR 2SC2812-L6-TB
OR	405 014 4509	TR 2SC2412K-T96-R
Q4836	405 015 8407	TR 2SC2812-L5-TB
OR	405 015 8704	TR 2SC2812-L6-TB
OR	405 014 4509	TR 2SC2412K-T96-R
OR	405 014 4400	TR 2SC2412K-T96-Q
Q4866	405 015 9909	TR 2SC2814-F5-TB
OR	405 015 9701	TR 2SC2814-F4-TB
OR	405 035 6100	TR 2SC2413K-T96-Q
OR	405 078 0400	TR 2SC2413K-T96-P
Q4868	405 002 6508	TR 2SA1179-M5-TB
OR	405 002 6706	TR 2SA1179-M6-TB
OR	405 002 0308	TR 2SA1037K-T96-R
OR	405 002 0209	TR 2SA1037K-T96-Q
Q4873	405 002 0209	TR 2SA1037K-T96-Q
OR	405 002 6508	TR 2SA1179-M5-TB
OR	405 002 6706	TR 2SA1179-M6-TB
OR	405 002 0308	TR 2SA1037K-T96-R
R4701	401 039 0403	MT-GLAZE 8.2K JA 1/10W
R4702	401 037 6704	MT-GLAZE 1.2K JA 1/10W
R4703	401 037 8203	MT-GLAZE 1.5M JA 1/10W
R4704	401 037 6704	MT-GLAZE 1.2K JA 1/10W
R4705	401 037 8203	MT-GLAZE 1.5M JA 1/10W
R4706	401 039 0403	MT-GLAZE 8.2K JA 1/10W
R4707	401 038 7601	MT-GLAZE 560 JA 1/10W
R4709	401 038 6000	MT-GLAZE 43K JA 1/10W
R4710	401 038 5102	MT-GLAZE 3.9K JA 1/10W
R4711	401 037 8104	MT-GLAZE 150K JA 1/10W
R4712	401 037 8104	MT-GLAZE 150K JA 1/10W
R4713	401 038 5102	MT-GLAZE 3.9K JA 1/10W
R4715	401 038 6000	MT-GLAZE 43K JA 1/10W
R4716	401 038 7601	MT-GLAZE 560 JA 1/10W
R4717	401 037 9507	MT-GLAZE 1.8M JA 1/10W
R4726	401 037 5608	MT-GLAZE 10K JA 1/10W
R4728	401 037 5608	MT-GLAZE 10K JA 1/10W
R4731	401 038 0701	MT-GLAZE 2.2K JA 1/10W
R4732	401 038 0701	MT-GLAZE 2.2K JA 1/10W
R4734	401 037 6803	MT-GLAZE 12K JA 1/10W
R4735	401 037 9309	MT-GLAZE 18K JA 1/10W
R4736	401 037 6803	MT-GLAZE 12K JA 1/10W
R4737	401 037 8104	MT-GLAZE 150K JA 1/10W
R4738	401 037 7404	MT-GLAZE 13K JA 1/10W
R4739	401 038 3801	MT-GLAZE 330K JA 1/10W
R4741	401 039 0304	MT-GLAZE 820 JA 1/10W
R4742	401 037 6704	MT-GLAZE 1.2K JA 1/10W
R4743	401 037 9507	MT-GLAZE 1.8M JA 1/10W
R4744	401 038 0701	MT-GLAZE 2.2K JA 1/10W
R4745	401 038 3603	MT-GLAZE 3.3K JA 1/10W
R4746	401 038 0701	MT-GLAZE 2.2K JA 1/10W
R4747	401 038 7908	MT-GLAZE 560K JA 1/10W
R4748	401 038 7601	MT-GLAZE 560 JA 1/10W
R4749	401 037 5400	MT-GLAZE 1K JA 1/10W
R4750	401 037 5400	MT-GLAZE 1K JA 1/10W
R4751	401 038 7908	MT-GLAZE 560K JA 1/10W
R4752	401 037 5400	MT-GLAZE 1K JA 1/10W
R4753	401 037 8609	MT-GLAZE 1.6K JA 1/10W
R4754	401 039 0304	MT-GLAZE 820 JA 1/10W
R4755	401 038 0701	MT-GLAZE 2.2K JA 1/10W
R4756	401 037 5400	MT-GLAZE 1K JA 1/10W
R4757	401 037 5400	MT-GLAZE 1K JA 1/10W
R4758	401 038 0701	MT-GLAZE 2.2K JA 1/10W
R4759	401 037 6704	MT-GLAZE 1.2K JA 1/10W
R4761	401 037 5608	MT-GLAZE 10K JA 1/10W
R4762	401 038 5300	MT-GLAZE 39K JA 1/10W
R4763	401 038 0800	MT-GLAZE 22K JA 1/10W
R4764	401 037 8104	MT-GLAZE 150K JA 1/10W
R4765	401 037 5400	MT-GLAZE 1K JA 1/10W
R4766	401 037 5806	MT-GLAZE 1M JA 1/10W
R4767	401 037 8708	MT-GLAZE 16K JA 1/10W
R4768	401 038 3702	MT-GLAZE 33K JA 1/10W
R4769	401 039 1004	MT-GLAZE 9.1K JA 1/10W
R4770	401 037 5400	MT-GLAZE 1K JA 1/10W
R4771	401 037 7305	MT-GLAZE 1.3K JA 1/10W
R4772	401 037 7305	MT-GLAZE 1.3K JA 1/10W
R4773	401 038 6604	MT-GLAZE 470K JA 1/10W
R4774	401 037 7909	MT-GLAZE 1.5K JA 1/10W
R4775	401 038 5003	MT-GLAZE 390 JA 1/10W
R4776	401 038 5805	MT-GLAZE 430 JA 1/10W
R4777	401 037 7909	MT-GLAZE 1.5K JA 1/10W
R4778	401 037 9309	MT-GLAZE 18K JA 1/10W
R4779	401 038 0800	MT-GLAZE 22K JA 1/10W
R4783	401 037 5202	MT-GLAZE 100 JA 1/10W
R4784	401 037 5202	MT-GLAZE 100 JA 1/10W
R4785	401 037 5202	MT-GLAZE 100 JA 1/10W
R4786	401 038 0701	MT-GLAZE 2.2K JA 1/10W
R4787	401 038 0701	MT-GLAZE 2.2K JA 1/10W
R4788	401 037 5400	MT-GLAZE 1K JA 1/10W
R4789	401 037 5400	MT-GLAZE 1K JA 1/10W
R4790	401 038 1302	MT-GLAZE 2.4K JA 1/10W
R4791	401 037 5400	MT-GLAZE 1K JA 1/10W
R4794	401 037 5400	MT-GLAZE 1K JA 1/10W
R4795	401 038 1302	MT-GLAZE 2.4K JA 1/10W

LOCATION	PARTS NO.	DESCRIPTION
R4796	401 037 5400	MT-GLAZE 1K JA 1/10W
R4801	401 037 5400	MT-GLAZE 1K JA 1/10W
R4802	401 037 5202	MT-GLAZE 100 JA 1/10W
R4803	401 037 5400	MT-GLAZE 1K JA 1/10W
R4804	401 037 5202	MT-GLAZE 100 JA 1/10W
R4806	401 037 7305	MT-GLAZE 1.3K JA 1/10W
R4807	401 038 9001	MT-GLAZE 680 JA 1/10W
R4808	401 037 5400	MT-GLAZE 1K JA 1/10W
R4809	401 038 9209	MT-GLAZE 6.8K JA 1/10W
R4810	401 037 7305	MT-GLAZE 1.3K JA 1/10W
R4811	401 038 7700	MT-GLAZE 5.6K JA 1/10W
R4812	401 037 7305	MT-GLAZE 1.3K JA 1/10W
R4813	401 038 9001	MT-GLAZE 680 JA 1/10W
R4814	401 037 5400	MT-GLAZE 1K JA 1/10W
R4815	401 037 7305	MT-GLAZE 1.3K JA 1/10W
R4816	401 037 7305	MT-GLAZE 1.3K JA 1/10W
R4823	401 038 6406	MT-GLAZE 4.7K JA 1/10W
R4824	401 037 5707	MT-GLAZE 100K JA 1/10W
R4833	401 037 7305	MT-GLAZE 1.3K JA 1/10W
R4836	401 037 5202	MT-GLAZE 100 JA 1/10W
R4838	401 037 5400	MT-GLAZE 1K JA 1/10W
R4839	401 037 5400	MT-GLAZE 1K JA 1/10W
R4840	401 039 0304	MT-GLAZE 820 JA 1/10W
R4841	401 038 0701	MT-GLAZE 2.2K JA 1/10W
R4854	401 038 3603	MT-GLAZE 3.3K JA 1/10W
R4862	401 037 5400	MT-GLAZE 1K JA 1/10W
R4863	401 037 5608	MT-GLAZE 10K JA 1/10W
R4864	401 037 5400	MT-GLAZE 1K JA 1/10W
R4865	401 037 5400	MT-GLAZE 1K JA 1/10W
R4866	401 037 5400	MT-GLAZE 1K JA 1/10W
R4867	401 037 7909	MT-GLAZE 1.5K JA 1/10W
R4868	401 038 6307	MT-GLAZE 470 JA 1/10W
R4870	401 037 7909	MT-GLAZE 1.5K JA 1/10W
R4871	401 037 7909	MT-GLAZE 1.5K JA 1/10W
R4872	401 038 0701	MT-GLAZE 2.2K JA 1/10W
R4873	401 037 5400	MT-GLAZE 1K JA 1/10W
R4878	401 037 5608	MT-GLAZE 10K JA 1/10W
R4886	401 037 6704	MT-GLAZE 1.2K JA 1/10W
R4887	401 037 6704	MT-GLAZE 1.2K JA 1/10W
R4891	401 037 5400	MT-GLAZE 1K JA 1/10W
R4892	401 037 5400	MT-GLAZE 1K JA 1/10W
R4893	401 038 6406	MT-GLAZE 4.7K JA 1/10W
T4701	613 083 0081	FILTER,4MHZ L.P.
OR	613 088 6729	FILTER,4MHZ L.P.F
T4702	613 016 4919	HF COIL TRANS
OR	613 016 4896	HF COIL TRANS
OR	613 016 4902	HF COIL TRANS
OR	613 082 9498	HF COIL TRNAS
T4703	613 016 4919	HF COIL TRANS
OR	613 016 4896	HF COIL TRANS
OR	613 016 4902	HF COIL TRANS
OR	613 082 9498	HF COIL TRNAS
T4704	613 083 0104	FILTER,4MHZ L.P.
OR	613 088 6743	FILTER,4MHZ L.P.F
T4705	613 016 4759	HF COIL TRANS
OR	613 016 4735	HF COIL TRANS
OR	613 016 4742	HF COIL TRANS
OR	613 082 9443	HF COIL TRANS
VR471	613 001 8618	SEMI VR 10K
VR472	613 001 8601	SEMI VR 5K
VR473	613 001 8571	SEMI VR 1K
VR474	613 001 8649	SEMI VR 50K
VR475	613 001 8649	SEMI VR 50K
VR476	613 001 8571	SEMI VR 1K
VR477	613 001 8649	SEMI VR 50K
VR478	613 001 8571	SEMI VR 1K

LOCATION	PARTS NO.	DESCRIPTION
X4701	613 077 1124	CERAMIC RESONATOR
X4702	613 077 1124	CERAMIC RESONATOR
X4703	613 080 9407	OSC,CRYSTAL 4.43MHZ
X4704	613 002 8709	CRYSTAL
XF472	613 085 9433	FILTER
XF473	613 085 9433	FILTER
COMPL,DM-3		
COMPL.NO.	613 084 2053	
IC431	409 156 4106	IC JUA544
COMPL,DM-4		
COMPL.NO.	613 085 9907	
C7521	403 001 1609	CERAMIC 0.01U K 16V
C7522	403 121 9509	CERAMIC 0.1U Z 50V
C7523	403 038 2006	ELECT 100U M 6.3V
C7524	403 043 4408	ELECT 33U M 16V
C7525	403 022 7703	CERAMIC 33P J 50V
C7526	403 022 7703	CERAMIC 33P J 50V
D7505	407 012 4406	DIODE 1SS133-T-77
IC751	409 167 8407	IC LC6521H-3870
IC752	409 032 3704	IC MN1280-R
OR	409 032 3803	IC MN1280-S
L7501	613 015 6730	HF CHOKE 100UH K
R7521	401 012 5609	CARBON 1K JA 1/4W
R7522	401 012 5609	CARBON 1K JA 1/4W
R7523	401 012 5609	CARBON 1K JA 1/4W
R7524	401 012 5609	CARBON 1K JA 1/4W
R7526	401 012 5609	CARBON 1K JA 1/4W
R7527	401 012 5609	CARBON 1K JA 1/4W
R7528	401 012 5609	CARBON 1K JA 1/4W
R7529	401 012 5609	CARBON 1K JA 1/4W
R7530	401 012 5609	CARBON 1K JA 1/4W
R7531	401 012 5609	CARBON 1K JA 1/4W
R7532	401 012 5609	CARBON 1K JA 1/4W
R7533	401 012 5609	CARBON 1K JA 1/4W
R7534	401 012 5708	CARBON 1K JA 1/4W
R7535	401 012 5609	CARBON 1K JA 1/4W
R7536	401 012 5708	CARBON 1K JA 1/4W
R7537	401 012 5609	CARBON 1K JA 1/4W
R7538	401 012 5609	CARBON 1K JA 1/4W
R7540	401 012 5609	CARBON 1K JA 1/4W
R7541	401 012 5609	CARBON 1K JA 1/4W
R7542	401 022 7105	CARBON 750 JA 1/4W
R7543	401 012 6903	CARBON 10K JA 1/4W
R7544	401 012 6903	CARBON 10K JA 1/4W
R7545	401 012 6903	CARBON 10K JA 1/4W
R7546	401 012 6903	CARBON 10K JA 1/4W
RB751	613 079 5885	R-NETWORK,10KX5
X7501	613 016 6869	CERAMIC RESONATOR 4MHZ
OR	613 016 7026	CERAMIC RESONATOR 4MHZ
COMPL,DM-5		
COMPL.NO.	613 083 0623	
C4911	403 039 2609	ELECT 47U M 6.3V
C4912	403 003 3700	CERAMIC 0.022U Z 25V
C4913	403 039 2609	ELECT 47U M 6.3V
C4914	403 049 0800	ELECT 1U M 50V
C4915	403 003 3700	CERAMIC 0.022U Z 25V

LOCATION	PARTS NO.	DESCRIPTION
C4921	403 039 2609	ELECT 47U M 6.3V
C4922	403 003 3700	CERAMIC 0.022U Z 25V
C4923	403 039 2609	ELECT 47U M 6.3V
C4924	403 039 2609	ELECT 47U M 6.3V
C4931	403 043 9601	ELECT 47U M 16V
C4932	403 003 3700	CERAMIC 0.022U Z 25V
C4934	403 043 9601	ELECT 47U M 16V
C4935	403 043 9601	ELECT 47U M 16V
C4951	403 003 3700	CERAMIC 0.022U Z 25V
D4911	407 012 4406	DIODE 1SS133-T-77
OR	407 007 9904	DIODE GMA01-BT
D4912	407 012 4406	DIODE 1SS133-T-77
OR	407 007 9904	DIODE GMA01-BT
D4921	407 012 4406	DIODE 1SS133-T-77
OR	407 007 9904	DIODE GMA01-BT
D4922	407 012 4406	DIODE 1SS133-T-77
OR	407 007 9904	DIODE GMA01-BT
D4931	407 012 4406	DIODE 1SS133-T-77
OR	407 007 9904	DIODE GMA01-BT
IC491	409 159 4707	IC NJM2246D
IC492	409 120 3401	IC LA7221
OR	409 003 4501	IC BA7021
IC493	409 146 7209	IC LA7222
L4911	613 015 6730	HF CHOKE 100UH K
L4921	613 015 6730	HF CHOKE 100UH K
L4931	613 015 6730	HF CHOKE 100UH K
Q4921	405 004 4007	TR 2SA608-E-SPA-AC
OR	405 004 4601	TR 2SA608-F-SPA-AC
OR	405 006 1707	TR 2SA933S-TP-Q
OR	405 006 1806	TR 2SA933S-T93-R
Q4931	405 004 4007	TR 2SA608-E-SPA-AC
OR	405 004 4601	TR 2SA608-F-SPA-AC
OR	405 006 1707	TR 2SA933S-TP-Q
OR	405 006 1806	TR 2SA933S-T93-R
R4911	401 012 6903	CARBON 10K JA 1/4W
R4912	401 020 2805	CARBON 47K JA 1/4W
R4913	401 012 6903	CARBON 10K JA 1/4W
R4914	401 020 2805	CARBON 47K JA 1/4W
R4916	401 012 9201	CARBON 1M JA 1/4W
R4917	401 012 9201	CARBON 1M JA 1/4W
R4922	401 020 2805	CARBON 47K JA 1/4W
R4923	401 012 6903	CARBON 10K JA 1/4W
R4924	401 020 2805	CARBON 47K JA 1/4W
R4925	401 012 4404	CARBON 100 JA 1/4W
R4928	401 012 9201	CARBON 1M JA 1/4W
R4929	401 012 9201	CARBON 1M JA 1/4W
R4930	401 012 6903	CARBON 10K JA 1/4W
R4935	401 020 2805	CARBON 47K JA 1/4W
R4936	401 012 4404	CARBON 100 JA 1/4W
R4942	401 020 7800	CARBON 510 JA 1/4W
R4943	401 020 7800	CARBON 510 JA 1/4W
R4944	401 012 5609	CARBON 1K JA 1/4W
R4945	401 012 6903	CARBON 10K JA 1/4W
R4951	401 020 0702	CARBON 470 JA 1/4W
R4952	401 012 4404	CARBON 100 JA 1/4W

COMPL,VP-1

COMPL.NO.	613 083 0531	
	613 077 3135	BRACKET,VP-1
C1801	403 073 7004	CERAMIC 470P K 50V
C1802	403 068 9402	CERAMIC 100P K 50V
C1803	403 003 3304	CERAMIC 0.022U M 25V
C1804	403 049 0800	ELECT 1U M 50V
C1805	403 003 1805	CERAMIC 2200P M 25V
C1806	403 003 7104	CERAMIC 0.033U M 25V
C1807	403 009 1809	CERAMIC 10P J 50V
C1808	403 014 2600	CERAMIC 18P J 50V
C1809	403 003 7104	CERAMIC 0.033U M 25V
C1810	403 003 1805	CERAMIC 2200P M 25V
C1811	403 039 2609	ELECT 47U M 6.3V
C1812	403 001 1906	CERAMIC 0.01U M 16V
C1813	403 014 2600	CERAMIC 18P J 50V
C1814	403 026 2209	CERAMIC 47P J 50V
C1815	403 030 6309	CERAMIC 68P J 50V
C1816	403 022 7703	CERAMIC 33P J 50V
C1817	403 001 1906	CERAMIC 0.01U M 16V
C1818	403 043 9601	ELECT 47U M 16V
C1819	403 001 1906	CERAMIC 0.01U M 16V
C1820	403 003 3304	CERAMIC 0.022U M 25V
C1821	403 001 1906	CERAMIC 0.01U M 16V
C1822	403 001 1906	CERAMIC 0.01U M 16V
C1823	403 069 1207	CERAMIC 1000P K 50V
D1801	407 012 4406	DIODE 1SS133-T-77
OR	407 007 9904	DIODE GMA01-BT
IC181	409 134 2001	IC LA7320
L1801	613 014 0968	HF CHOKE 82UH K
L1802	613 014 0951	HF CHOKE 68UH K
L1803	613 015 6730	HF CHOKE 100UH K
L1804	613 014 0883	HF CHOKE 18UH K
L1805	613 014 0876	HF CHOKE 15UH K
L1806	613 014 0876	HF CHOKE 15UH K
L1807	613 014 0944	HF CHOKE 56UH K
L1808	613 015 6730	HF CHOKE 100UH K
Q1801	405 016 1100	TR 2SC2839-F-SPA-AC
OR	405 016 0905	TR 2SC2839-E-SPA-AC
OR	405 015 2603	TR 2SC2669-Y-TPE4
OR	405 015 2504	TR 2SC2669-O-TPE4
OR	405 012 9506	TR 2SC2058S-DCTP-Q
Q1802	405 016 1100	TR 2SC2839-F-SPA-AC
OR	405 016 0905	TR 2SC2839-E-SPA-AC
OR	405 015 2603	TR 2SC2669-Y-TPE4
OR	405 015 2504	TR 2SC2669-O-TPE4
OR	405 012 9506	TR 2SC2058S-DCTP-Q
Q1803	405 016 1100	TR 2SC2839-F-SPA-AC
OR	405 016 0905	TR 2SC2839-E-SPA-AC
OR	405 015 2603	TR 2SC2669-Y-TPE4
OR	405 015 2504	TR 2SC2669-O-TPE4
OR	405 012 9506	TR 2SC2058S-DCTP-Q
R1801	401 013 5202	CARBON 1.2K JA 1/4W
R1802	401 016 2505	CARBON 220 JA 1/4W
R1804	401 020 5509	CARBON 5.1 JA 1/4W
R1806	401 013 5202	CARBON 1.2K JA 1/4W
R1807	401 016 3700	CARBON 2.2K JA 1/4W
R1808	401 023 1607	CARBON 820 JA 1/4W
R1809	401 023 1607	CARBON 820 JA 1/4W
R1810	401 017 0708	CARBON 270 JA 1/4W
R1811	401 021 1807	CARBON 560 JA 1/4W
R1812	401 023 1607	CARBON 820 JA 1/4W
R1813	401 019 0904	CARBON 390 JA 1/4W
R1814	401 019 0904	CARBON 390 JA 1/4W
R1815	401 016 3700	CARBON 2.2K JA 1/4W
R1816	401 016 3700	CARBON 2.2K JA 1/4W
R1817	401 012 5609	CARBON 1K JA 1/4W
R1818	401 015 1509	CARBON 180 JA 1/4W
VR181	613 002 0345	SEMI VR 1KB

LOCATION	PARTS NO.	DESCRIPTION
VR182	613 002 0345	SEMI VR 1KB
COMPL,AD-1		
COMPL.NO.	613 084 3937	
B2040	405 018 2501	TR 2SC3399-AC
B2043	405 018 2501	TR 2SC3399-AC
B2051	405 018 2501	TR 2SC3399-AC
B2061	405 018 2501	TR 2SC3399-AC
B2201	405 018 2501	TR 2SC3399-AC
B2202	405 018 2501	TR 2SC3399-AC
C2001	403 049 0008	ELECT 1U M 50V
C2002	403 075 4506	CERAMIC 820P K 50V
C2004	403 038 8602	ELECT 33U M 6.3V
C2005	403 003 0600	CERAMIC 0.018U K 25V
C2006	403 048 6308	ELECT 0.47U M 50V
C2007	403 001 7007	CERAMIC 3900P K 16V
C2008	403 001 6505	CERAMIC 3300P K 16V
C2009	403 039 2104	ELECT 47U M 6.3V
C2010	403 041 8804	ELECT 10U M 16V
C2013	403 003 2406	CERAMIC 0.022U J 25V
C2015	403 046 9905	ELECT 4.7U M 25V
C2016	403 049 0008	ELECT 1U M 50V
C2017	403 043 3906	ELECT 33U M 16V
C2018	403 046 9905	ELECT 4.7U M 25V
C2019	403 043 9106	ELECT 47U M 16V
C2020	403 071 6207	CERAMIC 220P K 50V
C2021	403 081 7409	POLYPRO 0.033U J 100V
C2022	403 002 1905	CERAMIC 0.01U K 25V
C2024	403 002 1905	CERAMIC 0.01U K 25V
C2025	403 003 3700	CERAMIC 0.022U Z 25V
C2030	403 049 0008	ELECT 1U M 50V
C2031	403 049 0008	ELECT 1U M 50V
C2032	403 049 0008	ELECT 1U M 50V
C2034	403 049 0008	ELECT 1U M 50V
C2042	403 039 2104	ELECT 47U M 6.3V
C2061	403 043 9106	ELECT 47U M 16V
C2062	403 043 3906	ELECT 33U M 16V
C2075	403 049 0008	ELECT 1U M 50V
C2201	403 046 1602	ELECT 3.3U M 25V
C2202	403 041 8804	ELECT 10U M 16V
C2203	403 041 8804	ELECT 10U M 16V
C2204	403 041 8804	ELECT 10U M 16V
C2205	403 041 8804	ELECT 10U M 16V
C2207	403 041 8804	ELECT 10U M 16V
C2306	403 002 1905	CERAMIC 0.01U K 25V
D2002	407 012 4406	DIODE 1SS133-T-77
OR	407 007 9904	DIODE GMA01-BT
D2003	407 012 4406	DIODE 1SS133-T-77
OR	407 007 9904	DIODE GMA01-BT
D2040	407 012 4406	DIODE 1SS133-T-77
OR	407 007 9904	DIODE GMA01-BT
D2041	407 012 4406	DIODE 1SS133-T-77
OR	407 007 9904	DIODE GMA01-BT
D2051	407 007 9904	DIODE GMA01-BT
OR	407 012 4406	DIODE 1SS133-T-77
D2052	407 012 4406	DIODE 1SS133-T-77
OR	407 007 9904	DIODE GMA01-BT
IC201	409 133 1401	IC LA7294
IC202	409 018 7603	IC LA7016
IC221	409 053 8306	IC TK15021
L2001	613 015 5474	HF CHOKE 27MH
L2002	613 014 3037	HF CHOKE 10MH J
L2003	613 015 8550	CHOKE COIL 560UH K

LOCATION	PARTS NO.	DESCRIPTION
Q2001	405 024 9709	TR 2SD734-E-AA
OR	405 024 9907	TR 2SD734-F-AA
Q2041	405 019 1909	TR 2SC536-E-NP-AA
OR	405 019 2708	TR 2SC536-F-NP-AA
Q2042	405 019 1909	TR 2SC536-E-NP-AA
OR	405 019 2708	TR 2SC536-F-NP-AA
Q2061	405 013 6801	TR 2SC2274-E-AA
OR	405 013 7006	TR 2SC2274-F-AA
R2001	401 012 4404	CARBON 100 JA 1/4W
R2002	401 022 3008	CARBON 6.8K JA 1/4W
R2003	401 013 4106	CARBON 120 JA 1/4W
R2004	401 019 3905	CARBON 390K JA 1/4W
R2005	401 021 8905	CARBON 6.2K JA 1/4W
R2006	401 017 1705	CARBON 2.7K JA 1/4W
R2007	401 023 2703	CARBON 8.2K JA 1/4W
R2008	401 017 1705	CARBON 2.7K JA 1/4W
R2009	401 018 6501	CARBON 3.3M JA 1/4W
R2010	401 012 6903	CARBON 10K JA 1/4W
R2011	401 023 7401	CARBON 9.1K JA 1/4W
R2012	401 019 7705	CARBON 4.3K JA 1/4W
R2013	401 012 5609	CARBON 1K JA 1/4W
R2014	401 015 2605	CARBON 1.8K JA 1/4W
R2016	401 012 7009	CARBON 10K JA 1/4W
R2017	401 012 6903	CARBON 10K JA 1/4W
R2018	401 015 3800	CARBON 18K JA 1/4W
R2019	401 105 3701	CARBON 18K JA 1/4W
R2021	401 012 3308	CARBON 10 JA 1/4W
R2022	401 019 9501	CARBON 47 JA 1/4W
R2023	401 014 5102	CARBON 15K JA 1/4W
R2024	401 019 6104	CARBON 4.7 JA 1/4W
R2030	401 020 2805	CARBON 47K JA 1/4W
R2031	401 019 7705	CARBON 4.3K JA 1/4W
R2032	401 018 3708	CARBON 3.3K JA 1/4W
R2033	401 023 6909	CARBON 910 JA 1/4W
R2035	401 016 5704	CARBON 220K JA 1/4W
R2040	401 012 6903	CARBON 10K JA 1/4W
R2043	401 022 7600	CARBON 7.5K JA 1/4W
R2044	401 016 4707	CARBON 22K JA 1/4W
R2045	401 020 2805	CARBON 47K JA 1/4W
R2046	401 020 1907	CARBON 4.7K JA 1/4W
R2047	401 020 2805	CARBON 47K JA 1/4W
R2048	401 020 2805	CARBON 47K JA 1/4W
R2061	401 012 5609	CARBON 1K JA 1/4W
R2062	401 012 4404	CARBON 100 JA 1/4W
R2063	401 019 1802	CARBON 3.9K JA 1/4W
R2064	401 020 1907	CARBON 4.7K JA 1/4W
R2201	401 023 1607	CARBON 820 JA 1/4W
R2203	401 023 1607	CARBON 820 JA 1/4W
R2205	401 016 4707	CARBON 22K JA 1/4W
R2208	401 023 1607	CARBON 820 JA 1/4W
T2001	613 016 2205	OSC COIL 70KHZ
VR201	613 002 0468	SEMI VR 100KB
VR202	613 002 0406	SEMI VR 10KB
COMPL,SY-2		
COMPL.NO.	613 079 5564	
B3801	405 018 1900	TR 2SC3395-TB
B3804	405 018 1900	TR 2SC3395-TB
B3806	405 018 1900	TR 2SC3395-TB
C3181	403 118 0106	NP-ELECT 10U M 16V
C3182	403 069 1702	CERAMIC 1000P K 50V
C3183	403 068 0409	CERAMIC 0.1U Z 25V
C3186	403 068 0409	CERAMIC 0.1U Z 25V
C3801	403 069 9500	CERAMIC 0.01U Z 50V

LOCATION	PARTS NO.	DESCRIPTION
C3802	403 043 9601	ELECT 47U M 16V
C3803	403 068 0409	CERAMIC 0.1U Z 25V
C3804	403 069 5601	CERAMIC 0.01U K 50V
C3805	403 069 5601	CERAMIC 0.01U K 50V
C3806	403 012 6808	CERAMIC 15P J 50V
C3807	403 022 2609	CERAMIC 30P J 50V
C3808	403 069 5601	CERAMIC 0.01U K 50V
C3809	403 019 5101	CERAMIC 240P J 50V
C3810	403 043 9601	ELECT 47U M 16V
C3811	403 069 5601	CERAMIC 0.01U K 50V
C3812	403 069 5601	CERAMIC 0.01U K 50V
C3813	403 069 5601	CERAMIC 0.01U K 50V
D3181	407 007 9904	DIODE GMA01-BT
OR	407 012 4406	DIODE 1SS133-T-77
D3802	407 012 4406	DIODE 1SS133-T-77
OR	407 007 9904	DIODE GMA01-BT
D3804	407 003 3609	DIODE DAN202K-T-96
IC304	409 163 0306	IC LC6521H-3786
IC381	409 157 6505	IC M50927-650SP
L3801	613 014 1200	HF CHOKE 100UH J
L3802	613 015 6730	HF CHOKE 100UH K
L3803	613 014 1118	HF CHOKE 18UH J
L3804	613 015 6259	HF CHOKE 270UH J
L3805	613 014 1101	HF CHOKE 15UH J
Q3181	405 014 4509	TR 2SC2412K-T96-R
OR	405 014 4608	TR 2SC2412K-T96-S
Q3801	405 014 4509	TR 2SC2412K-T96-R
OR	405 015 8407	TR 2SC2812-L5-TB
Q3802	405 015 9701	TR 2SC2814-F4-TB
OR	405 078 0400	TR 2SC2413K-T96-P
OR	405 015 9909	TR 2SC2814-F5-TB
OR	405 035 6100	TR 2SC2413K-T96-Q
Q3803	405 015 9701	TR 2SC2814-F4-TB
OR	405 078 0400	TR 2SC2413K-T96-P
OR	405 015 9909	TR 2SC2814-F5-TB
OR	405 035 6100	TR 2SC2413K-T96-Q
Q3804	405 014 4509	TR 2SC2412K-T96-R
OR	405 015 8407	TR 2SC2812-L5-TB
Q3805	405 015 8902	TR 2SC2812-L7-TB
OR	405 014 4608	TR 2SC2412K-T96-S
OR	405 015 8407	TR 2SC2812-L5-TB
OR	405 014 4509	TR 2SC2412K-T96-R
R3181	401 038 6505	MT-GLAZE 47K JA 1/10W
R3182	401 038 3702	MT-GLAZE 33K JA 1/10W
R3183	401 037 8203	MT-GLAZE 1.5M JA 1/10W
R3184	401 038 0800	MT-GLAZE 22K JA 1/10W
R3185	401 037 5400	MT-GLAZE 1K JA 1/10W
R3189	401 037 5608	MT-GLAZE 10K JA 1/10W
R3190	401 035 5204	MT-GLAZE 10K JA 1/8W
R3191	401 037 5400	MT-GLAZE 1K JA 1/10W
R3192	401 037 5400	MT-GLAZE 1K JA 1/10W
R3193	401 037 5400	MT-GLAZE 1K JA 1/10W
R3194	401 037 5608	MT-GLAZE 10K JA 1/10W
R3196	401 037 5400	MT-GLAZE 1K JA 1/10W
R3197	401 012 5609	CARBON 1K JA 1/4W
R3198	401 037 5004	MT-GLAZE 0.000 ZA 1/10W
R3801	401 037 5400	MT-GLAZE 1K JA 1/10W
R3802	401 037 5400	MT-GLAZE 1K JA 1/10W
R3803	401 038 6604	MT-GLAZE 470K JA 1/10W
R3804	401 037 5400	MT-GLAZE 1K JA 1/10W
R3805	401 038 6604	MT-GLAZE 470K JA 1/10W
R3806	401 037 5004	MT-GLAZE 0.000 ZA 1/10W
R3807	401 037 5608	MT-GLAZE 10K JA 1/10W
R3809	401 037 5608	MT-GLAZE 10K JA 1/10W

LOCATION	PARTS NO.	DESCRIPTION
R3812	401 037 5608	MT-GLAZE 10K JA 1/10W
R3813	401 037 5608	MT-GLAZE 10K JA 1/10W
R3815	401 037 5608	MT-GLAZE 10K JA 1/10W
R3816	401 037 5004	MT-GLAZE 0.000 ZA 1/10W
R3817	401 038 6604	MT-GLAZE 470K JA 1/10W
R3819	401 037 5806	MT-GLAZE 1M JA 1/10W
R3820	401 037 5004	MT-GLAZE 0.000 ZA 1/10W
R3821	401 038 6604	MT-GLAZE 470K JA 1/10W
R3822	401 012 5609	CARBON 1K JA 1/4W
R3823	401 037 5608	MT-GLAZE 10K JA 1/10W
R3825	401 038 6604	MT-GLAZE 470K JA 1/10W
R3826	401 037 5400	MT-GLAZE 1K JA 1/10W
R3827	401 038 0701	MT-GLAZE 2.2K JA 1/10W
R3828	401 037 5608	MT-GLAZE 10K JA 1/10W
R3829	401 037 5608	MT-GLAZE 10K JA 1/10W
R3830	401 037 5608	MT-GLAZE 10K JA 1/10W
R3831	401 038 6604	MT-GLAZE 470K JA 1/10W
R3832	401 037 5400	MT-GLAZE 1K JA 1/10W
R3833	401 038 7700	MT-GLAZE 5.6K JA 1/10W
R3834	401 037 5400	MT-GLAZE 1K JA 1/10W
R3835	401 037 5400	MT-GLAZE 1K JA 1/10W
R3836	401 038 6604	MT-GLAZE 470K JA 1/10W
R3837	401 037 5004	MT-GLAZE 0.000 ZA 1/10W
R3838	401 038 3702	MT-GLAZE 33K JA 1/10W
R3839	401 038 0909	MT-GLAZE 220K JA 1/10W
R3840	401 037 5004	MT-GLAZE 0.000 ZA 1/10W
R3841	401 038 0909	MT-GLAZE 220K JA 1/10W
R3842	401 038 2200	MT-GLAZE 27K JA 1/10W
R3843	401 038 0701	MT-GLAZE 2.2K JA 1/10W
R3845	401 037 5608	MT-GLAZE 10K JA 1/10W
R3846	401 038 0602	MT-GLAZE 220 JA 1/10W
R3847	401 037 5004	MT-GLAZE 0.000 ZA 1/10W
R3848	401 039 0403	MT-GLAZE 8.2K JA 1/10W
R3849	401 038 2101	MT-GLAZE 2.7K JA 1/10W
R3850	401 038 0701	MT-GLAZE 2.2K JA 1/10W
R3851	401 037 6803	MT-GLAZE 12K JA 1/10W
R3852	401 038 9209	MT-GLAZE 6.8K JA 1/10W
R3853	401 037 5004	MT-GLAZE 0.000 ZA 1/10W
R3854	401 037 5400	MT-GLAZE 1K JA 1/10W
R3855	401 037 5004	MT-GLAZE 0.000 ZA 1/10W
R3856	401 037 5400	MT-GLAZE 1K JA 1/10W
R3857	401 038 0701	MT-GLAZE 2.2K JA 1/10W
R3858	401 038 6307	MT-GLAZE 470 JA 1/10W
R3859	401 038 3801	MT-GLAZE 330K JA 1/10W
R3860	401 038 3702	MT-GLAZE 33K JA 1/10W
R3863	401 037 5004	MT-GLAZE 0.000 ZA 1/10W
R3865	401 038 6604	MT-GLAZE 470K JA 1/10W
XF302	613 082 3557	RESONATOR,CERAMIC 4.0MHZ
XF381	613 079 7414	CERAMIC RESONATOR
COMPL.PW-1		
COMPL.NO.	613 081 4906	
	613 052 5543	FUSE HOLDER
C5001 ⚠	404 039 6703	MT-POLYPRO 0.22U K 250V
OR ⚠	404 040 8901	MT-POLYEST 0.22U M 250V
C5002 ⚠	404 039 6505	MT-POLYPRO 0.1U K 250V
OR ⚠	404 040 9007	MT-POLYEST 0.068U M 250V
C5003	404 038 5103	ELECT 82U M 400V
OR	404 036 2500	ELECT 82U M 400V
C5004	403 137 4604	MT-POLYEST 0.047U K 630V
C5006	404 033 1704	CERAMIC 680P K 2K
C5007	403 159 7508	ELECT 22U M 10V
C5009	403 093 9606	OS-SOLID 1U M 16V
C5010	403 058 3106	POLYESTER 0.015U J 50V
C5011	403 060 2203	POLYESTER 0.027U J 50V
C5020 ⚠	404 034 6302	CERAMIC 1000P K 400V

LOCATION	PARTS NO.	DESCRIPTION
C5020 ⚠	404 034 7200	CERAMIC 1000P M 400V
C5021 ⚠	404 034 7200	CERAMIC 1000P M 400V
OR ⚠	404 034 6302	CERAMIC 1000P K 400V
C5024 ⚠	404 032 6304	CERAMIC 2200P M 400V
OR ⚠	404 034 7507	CERAMIC 2200P M 400V
C5025 ⚠	404 032 6304	CERAMIC 2200P M 400V
OR ⚠	404 034 7507	CERAMIC 2200P M 400V
C5102	403 094 3405	OS-SOLID 100U M 20V
C5103	403 121 8700	ELECT 470U M 25V
OR	403 119 8002	ELECT 470U M 25V
C5104	403 093 6407	OS-SOLID 100U M 10V
C5105	403 147 9903	ELECT 470U M 10V
OR	403 160 4909	ELECT 470U M 10V
C5106	403 121 6607	ELECT 47U M 50V
OR	403 154 8302	ELECT 47U M 50V
C5107	403 148 1302	ELECT 100U M 50V
OR	403 160 9409	ELECT 100U M 50V
C5109	403 068 9402	CERAMIC 100P K 50V
C5110	403 137 4901	ELECT 47U M 16V
OR	403 156 1004	ELECT 47U M 16V
C5112	403 144 6806	ELECT 47U M 35V
OR	403 155 5706	ELECT 47U M 35V
C5120	403 159 4606	ELECT 100U M 16V
OR	403 126 4509	ELECT 100U M 16V
D5001	407 091 6704	DIODE AP01C-V0
D5002	407 078 2705	DIODE 1SS244-T-77
D5005	407 078 2705	DIODE 1SS244-T-77
D5102	407 097 0508	DIODE FML-G12S
D5103	407 097 5800	DIODE FMU-G2YXS
D5104	407 100 6909	DIODE AG01-V2
D5105	407 078 2705	DIODE 1SS244-T-77
D5106	407 100 6909	DIODE AG01-V2
D5107	407 051 7000	ZENER DIODE GZS5.6Z-BT
OR	407 053 6803	ZENER DIODE MTZ5.6C-T-77
D5108	407 007 9904	DIODE GMA01-BT
D5109	407 053 2706	ZENER DIODE MTZ10C-T-77
D5120	407 100 6909	DIODE AG01-V2
F5001 ⚠	423 006 1305	FUSE 250V 2A
F5101 ⚠	423 011 8603	FUSE 250V 1.6A
IC501	409 149 6803	IC STK73605
L5001	613 086 4512	LF CHOKE
L5101	613 015 8178	CHOKE COIL 10UH K
L5102	613 017 0354	CORE
L5104	613 015 2633	HF CHOKE 10UH
L5105	613 014 6823	HF CHOKE 100UH K
Q5101	405 022 7202	TR 2SD1666-S
OR	405 022 7004	TR 2SD1666-R
Q5102	405 007 3106	TR 2SB544-F-MP-AE
R5001	401 019 3905	CARBON 390K JA 1/4W
R5002	401 019 3905	CARBON 390K JA 1/4W
R5003	401 019 3905	CARBON 390K JA 1/4W
R5004	401 019 3905	CARBON 390K JA 1/4W
R5005	401 070 7508	OXIDE-MT 100K JA 3W
R5006	401 012 3506	CARBON 10 JB 1/4W
R5007	402 035 3801	RESISTER 0.47 KB 2W
R5008	401 058 3201	OXIDE-MT 100 JA 1W
R5010	401 021 1807	CARBON 560 JA 1/4W
R5012	401 019 9600	CARBON 47 JA 1/4W
R5013	401 058 3201	OXIDE-MT 100 JA 1W
R5103	401 057 7903	OXIDE-MT 1 JA 1W
R5104	401 023 1607	CARBON 820 JA 1/4W
R5105	401 014 2804	CARBON 150 JA 1/4W
R5106	401 014 2804	CARBON 150 JA 1/4W

LOCATION	PARTS NO.	DESCRIPTION
R5107	401 013 6308	CARBON 12K JA 1/4W
R5108	401 009 9702	CARBON 3.9K JA 1/2W
R5109	401 021 8905	CARBON 6.2K JA 1/4W
R5110	401 016 3700	CARBON 2.2K JA 1/4W
R5111	401 017 7202	CARBON 3.9 JB 1/4W
T5001 ⚠	613 081 5323	TRANS.SW
COMPL.PW-2		
COMPL.NO.	613 080 0862	
C5201	403 076 6707	CERAMIC 1000P K 1K
C5202	403 076 6707	CERAMIC 1000P K 1K
D5201	407 091 7107	DIODE LB156
R5201	401 080 0605	WIRE WOUND 2.2 KA 2W
R5202 ⚠	401 001 8000	SOLID 2.7M MA 1/2W
OR ⚠	401 001 7904	SOLID 2.7M KA 1/2W
COMPL.PW-3		
COMPL.NO.	613 080 0879	
C5301	403 137 4901	ELECT 47U M 16V
OR	403 156 1004	ELECT 47U M 16V
C5302	403 121 9509	CERAMIC 0.1U Z 50V
C5303	403 137 4901	ELECT 47U M 16V
OR	403 156 1004	ELECT 47U M 16V
D5301	407 078 2705	DIODE 1SS244-T-77
IC531	409 149 6704	IC STK5473
IC532	409 157 8608	IC PQ05R041
R5301	401 019 7705	CARBON 4.3K JA 1/4W
R5302	401 019 7705	CARBON 4.3K JA 1/4W
R5303	401 013 6308	CARBON 12K JA 1/4W
R5304	401 019 1802	CARBON 3.9K JA 1/4W
COMPL.IR-1		
COMPL.NO.	613 080 0091	
	613 087 7420	INSULATOR
	613 081 6726	HOLDER
	613 081 6733	RADIATOR
C5501	403 046 4009	ELECT 33U M 25V
C5502	403 048 2706	ELECT 0.22U M 50V
C5503	403 049 1005	ELECT 1U M 50V
C5504	403 121 9509	CERAMIC 0.1U Z 50V
C5505	403 046 4009	ELECT 33U M 25V
C5506	403 044 7507	ELECT 10U M 25V
C5507	403 046 4009	ELECT 33U M 25V
C5508	403 121 9509	CERAMIC 0.1U Z 50V
C5509	403 002 2308	CERAMIC 0.01U K 25V
C5510	403 041 9603	ELECT 10U M 16V
C5511	403 049 1005	ELECT 1U M 50V
C5601	403 047 9201	ELECT 0.1U M 50V
C5602	403 062 9507	POLYESTER 6800P J 50V
C5603	403 159 1704	TA-SOLID 22U K 10V
C5604	403 060 0209	POLYESTER 2700P J 50V
C5610	403 048 7107	ELECT 0.47U M 50V
C5611	403 060 7802	POLYESTER 0.033U J 50V
C5612	403 090 3706	TA-SOLID 10U K 10V
C5613	403 039 6102	ELECT 10U M 10V
C5614	403 057 0007	POLYESTER 0.01U J 50V
C5615	403 107 5303	TA-SOLID 2.2U K 10V
C5616	403 060 5600	POLYESTER 3300P J 50V
C5617	403 040 8102	ELECT 33U M 10V

LOCATION	PARTS NO.	DESCRIPTION
C5618	403 048 7107	ELECT 0.47U M 50V
C5619	403 069 0309	CERAMIC 1000P J 50V
C5620	403 071 5408	CERAMIC 220P J 50V
C5621	403 049 1005	ELECT 1U M 50V
C5622	403 002 2308	CERAMIC 0.01U K 25V
C5623	403 050 0707	ELECT 2.2U M 50V
C5624	403 026 2209	CERAMIC 47P J 50V
C5701	403 047 9201	ELECT 0.1U M 50V
C5702	403 062 9507	POLYESTER 6800P J 50V
C5703	403 159 1704	TA-SOLID 22U K 10V
C5704	403 060 0209	POLYESTER 2700P J 50V
C5710	403 048 7107	ELECT 0.47U M 50V
C5711	403 060 7802	POLYESTER 0.033U J 50V
C5712	403 090 3706	TA-SOLID 10U K 10V
C5713	403 039 6102	ELECT 10U M 10V
C5714	403 057 0007	POLYESTER 0.01U J 50V
C5715	403 107 5303	TA-SOLID 2.2U K 10V
C5716	403 060 5600	POLYESTER 3300P J 50V
C5717	403 040 8102	ELECT 33U M 10V
C5718	403 048 7107	ELECT 0.47U M 50V
C5719	403 069 0309	CERAMIC 1000P J 50V
C5720	403 068 8801	CERAMIC 100P J 50V
C5721	403 049 1005	ELECT 1U M 50V
C5722	403 002 2308	CERAMIC 0.01U K 25V
C5723	403 050 0707	ELECT 2.2U M 50V
C5724	403 026 2209	CERAMIC 47P J 50V
D5501	407 051 4405	ZENER DIODE GZS13Y-BT
OR	407 099 6805	ZENER DIODE MTZJ13B-T-77
D5502	407 012 4406	DIODE 1SS133-T-77
OR	407 007 9904	DIODE GMA01-BT
D5503	407 111 8909	LED SRZ-938C-4-AB
D5504	407 111 8909	LED SRZ-938C-4-AB
D5505	407 111 8909	LED SRZ-938C-4-AB
D5506	407 111 8909	LED SRZ-938C-4-AB
D5507	407 111 8909	LED SRZ-938C-4-AB
D5508	407 111 8909	LED SRZ-938C-4-AB
D5509	407 111 8909	LED SRZ-938C-4-AB
D5510	407 111 8909	LED SRZ-938C-4-AB
D5511	407 111 8909	LED SRZ-938C-4-AB
D5512	407 111 8909	LED SRZ-938C-4-AB
D5513	407 111 8909	LED SRZ-938C-4-AB
D5514	407 111 8909	LED SRZ-938C-4-AB
D5515	407 111 8909	LED SRZ-938C-4-AB
D5516	407 111 8909	LED SRZ-938C-4-AB
D5517	407 111 8909	LED SRZ-938C-4-AB
D5518	407 111 8909	LED SRZ-938C-4-AB
D5519	407 111 8909	LED SRZ-938C-4-AB
D5520	407 111 8909	LED SRZ-938C-4-AB
D5601	407 007 9904	DIODE GMA01-BT
OR	407 012 4406	DIODE 1SS133-T-77
D5602	407 007 9904	DIODE GMA01-BT
OR	407 012 4406	DIODE 1SS133-T-77
D5701	407 007 9904	DIODE GMA01-BT
OR	407 012 4406	DIODE 1SS133-T-77
D5702	407 007 9904	DIODE GMA01-BT
OR	407 012 4406	DIODE 1SS133-T-77
IC551	409 036 8804	IC M5278L05-01
IC552	409 159 2208	IC AN6291K
IC553	409 039 7408	IC NJM4558D
IC561	409 158 6405	IC NE566N
IC571	409 158 6405	IC NE566N
Q5501	405 086 3103	TR 2SD1683-T-LT
Q5502	405 086 3103	TR 2SD1683-T-LT
Q5503	405 007 6701	TR 2SB598-F-NP
Q5504	405 019 2807	TR 2SC536-F-SPA-AC
Q5602	405 004 4007	TR 2SA608-E-SPA-AC

LOCATION	PARTS NO.	DESCRIPTION
Q5603	405 004 4007	TR 2SA608-E-SPA-AC
Q5702	405 004 4007	TR 2SA608-E-SPA-AC
Q5703	405 004 4007	TR 2SA608-E-SPA-AC
R5502	401 018 2701	CARBON 330 JA 1/4W
R5503	401 010 9807	CARBON 6.8 JA 1/2W
R5504	401 010 9807	CARBON 6.8 JA 1/2W
R5505	401 010 9807	CARBON 6.8 JA 1/2W
R5506	401 010 9807	CARBON 6.8 JA 1/2W
R5507	401 010 9807	CARBON 6.8 JA 1/2W
R5508	401 010 9807	CARBON 6.8 JA 1/2W
R5509	401 019 8207	CARBON 43K JA 1/4W
R5510	401 012 8006	CARBON 100K JA 1/4W
R5511	401 012 5609	CARBON 1K JA 1/4W
R5512	401 018 7904	CARBON 3.6K JA 1/4W
R5513	401 019 0904	CARBON 390 JA 1/4W
R5514	401 016 3700	CARBON 2.2K JA 1/4W
R5515	401 016 8408	CARBON 24K JA 1/4W
R5516	401 087 2602	MT-FILM 1K FD 1/6W
R5601	401 016 4707	CARBON 22K JA 1/4W
R5602	401 012 5609	CARBON 1K JA 1/4W
R5603	401 020 8807	CARBON 51K JA 1/4W
R5604	401 014 5102	CARBON 15K JA 1/4W
R5605	401 020 8807	CARBON 51K JA 1/4W
R5606	401 018 2701	CARBON 330 JA 1/4W
R5614	401 012 6903	CARBON 10K JA 1/4W
R5615	401 012 5609	CARBON 1K JA 1/4W
R5616	401 021 1807	CARBON 560 JA 1/4W
R5618	401 014 5102	CARBON 15K JA 1/4W
R5619	401 017 9701	CARBON 30K JA 1/4W
R5620	401 017 2702	CARBON 27K JA 1/4W
R5621	401 016 8705	CARBON 240K JA 1/4W
R5622	401 023 2703	CARBON 8.2K JA 1/4W
R5623	401 015 4609	CARBON 180K JA 1/4W
R5624	401 014 9407	CARBON 160K JA 1/4W
R5625	401 020 8302	CARBON 5.1K JA 1/4W
R5626	401 023 3601	CARBON 82K JA 1/4W
R5627	401 021 2903	CARBON 5.6K JA 1/4W
R5628	401 013 1808	CARBON 11K JA 1/4W
R5629	401 017 3709	CARBON 270K JA 1/4W
R5630	401 013 6308	CARBON 12K JA 1/4W
R5631	401 013 6308	CARBON 12K JA 1/4W
R5701	401 016 4707	CARBON 22K JA 1/4W
R5702	401 012 5609	CARBON 1K JA 1/4W
R5703	401 020 8807	CARBON 51K JA 1/4W
R5704	401 014 5102	CARBON 15K JA 1/4W
R5705	401 020 8807	CARBON 51K JA 1/4W
R5706	401 018 2701	CARBON 330 JA 1/4W
R5714	401 012 6903	CARBON 10K JA 1/4W
R5715	401 012 5609	CARBON 1K JA 1/4W
R5716	401 021 1807	CARBON 560 JA 1/4W
R5718	401 014 5102	CARBON 15K JA 1/4W
R5719	401 017 9701	CARBON 30K JA 1/4W
R5720	401 017 2702	CARBON 27K JA 1/4W
R5721	401 016 8705	CARBON 240K JA 1/4W
R5722	401 023 2703	CARBON 8.2K JA 1/4W
R5723	401 015 4609	CARBON 180K JA 1/4W
R5724	401 016 8705	CARBON 240K JA 1/4W
R5725	401 019 1802	CARBON 3.9K JA 1/4W
R5726	401 018 4804	CARBON 33K JA 1/4W
R5727	401 020 1907	CARBON 4.7K JA 1/4W
R5728	401 012 6903	CARBON 10K JA 1/4W
R5729	401 017 3709	CARBON 270K JA 1/4W
R5730	401 012 6903	CARBON 10K JA 1/4W
R5731	401 012 6903	CARBON 10K JA 1/4W
SW551	613 081 5347	SW.PUSH 2-2
VR551	613 001 8991	SEMI VR 2.2KB

LOCATION	PARTS NO.	DESCRIPTION
VR551	613 001 9387	SEMI VR 2KB
VR561	613 001 9011	SEMI VR 4.7KB
OR	613 001 9400	SEMI VR 5KB
VR571	613 001 9011	SEMI VR 4.7KB
OR	613 001 9400	SEMI VR 5KB

IF PACK

COMPL.NO.	613 086 0453	
C6103	403 071 8102	CERAMIC 2200P K 50V
C6105	403 071 8102	CERAMIC 2200P K 50V
C6106	403 075 0706	CERAMIC 6800P K 50V
C6107	403 069 1702	CERAMIC 1000P K 50V
C6108	403 012 6808	CERAMIC 15P J 50V
C6109	403 049 1005	ELECT 1U M 50V
C6110	403 069 1702	CERAMIC 1000P K 50V
C6111	403 075 0706	CERAMIC 6800P K 50V
C6112	403 053 9707	ELECT 4.7U M 35V
C6113	403 075 0706	CERAMIC 6800P K 50V
C6114	403 047 9201	ELECT 0.1U M 50V
C6115	403 071 3503	CERAMIC 0.018U K 50V
C6116	403 043 9700	ELECT 47U M 16V
C6117	403 022 8205	CERAMIC 33P J 50V
C6119	403 071 3503	CERAMIC 0.018U K 50V
C6120	403 030 7207	CERAMIC 68P J 50V
C6121	403 033 4708	CERAMIC 82P J 50V
C6122	403 014 3508	CERAMIC 18P J 50V
C6123	403 071 3503	CERAMIC 0.018U K 50V
C6124	403 041 9603	ELECT 10U M 16V
C6125	403 041 9603	ELECT 10U M 16V
C6126	403 058 2406	POLYESTER 0.015U J 50V
C6127	403 075 0706	CERAMIC 6800P K 50V
C6128	403 075 0706	CERAMIC 6800P K 50V
C6129	403 075 5305	CERAMIC 8200P K 50V
C6131	403 017 1006	CERAMIC 20P J 50V
D6101	407 012 4406	DIODE 1SS133
F6101	421 002 5808	FILTER
F6102	613 086 4468	FILTER
F6103	613 085 9457	FILTER
F6104	613 084 1667	FILTER
IC611	409 019 3307	IC LA7530N
L6101	613 014 6687	HF CHOKE 3.9UH
L6102	613 014 6694	HF CHOKE 1.2UH
L6103	613 014 1095	HF CHOKE 12UH J
L6104	613 014 1149	HF CHOKE 33UH J
L6105	613 014 1057	HF CHOKE 5.6UH J
Q6101	405 015 5505	TR 2SC2757-T1B-T33
Q6103	405 001 9906	TR 2SA1037K-T96-FQ
Q6104	405 011 8401	TR 2SC1740S-Q
Q6105	405 021 2406	TR 2SD1048-X7-TB
Q6106	405 029 3504	TR DTC144EK-T96
R6101	401 039 0205	MT-GLAZE 82 JA 1/10W
R6103	401 038 9704	MT-GLAZE 7.5K JA 1/10W
R6104	401 037 7909	MT-GLAZE 1.5K JA 1/10W
R6105	401 038 7601	MT-GLAZE 560 JA 1/10W
R6106	401 038 0503	MT-GLAZE 22 JA 1/10W
R6107	401 037 7800	MT-GLAZE 150 JA 1/10W
R6108	401 037 7800	MT-GLAZE 150 JA 1/10W
R6109	401 037 5400	MT-GLAZE 1K JA 1/10W
R6111	401 038 6307	MT-GLAZE 470 JA 1/10W
R6112	401 038 2002	MT-GLAZE 270 JA 1/10W
R6113	401 038 7700	MT-GLAZE 5.6K JA 1/10W
R6114	401 038 0701	MT-GLAZE 2.2K JA 1/10W
R6115	401 037 9200	MT-GLAZE 1.8K JA 1/10W
R6116	401 038 2903	MT-GLAZE 300 JA 1/10W
R6120	401 038 7106	MT-GLAZE 510 JA 1/10W
R6121	401 038 7106	MT-GLAZE 510 JA 1/10W
R6122	402 004 1203	FUSIBLE RES 22 JA 1/4W
R6123	401 038 7205	MT-GLAZE 5.1K JA 1/10W
R6124	401 038 7205	MT-GLAZE 5.1K JA 1/10W
R6125	401 039 0205	MT-GLAZE 82 JA 1/10W
R6126	401 037 9408	MT-GLAZE 180K JA 1/10W
R6127	401 039 0502	MT-GLAZE 82K JA 1/10W
R6128	401 037 5707	MT-GLAZE 100K JA 1/10W
R6133	401 037 9200	MT-GLAZE 1.8K JA 1/10W
R6134	401 038 0800	MT-GLAZE 22K JA 1/10W
R6135	401 037 5400	MT-GLAZE 1K JA 1/10W
R6137	401 038 1302	MT-GLAZE 2.4K JA 1/10W
R6138	401 038 0107	MT-GLAZE 2K JA 1/10W
R6139	401 038 6406	MT-GLAZE 4.7K JA 1/10W
R6140	401 037 5400	MT-GLAZE 1K JA 1/10W
R6141	401 037 5608	MT-GLAZE 10K JA 1/10W
T6101	613 016 0850	IFT
T6102	613 016 0867	IFT
VR611	613 001 9035	SEMI VR 10KB

COMPL,TM-1

COMPL.NO.	613 084 6723	
	613 022 0875	HOLDER
A7101	613 084 3197	VFD
C7101	403 009 1809	CERAMIC 10P J 50V
C7102	403 017 9705	CERAMIC 22P J 50V
C7103	403 017 9705	CERAMIC 22P J 50V
C7104	403 121 9509	CERAMIC 0.1U Z 50V
C7105	403 042 8407	ELECT 22U M 16V
C7106	403 001 1906	CERAMIC 0.01U M 16V
C7107	403 001 1906	CERAMIC 0.01U M 16V
C7108	403 048 7107	ELECT 0.47U M 50V
C7109	403 121 9509	CERAMIC 0.1U Z 50V
C7110	403 069 0309	CERAMIC 1000P J 50V
C7111	403 121 9509	CERAMIC 0.1U Z 50V
C7112	403 001 1906	CERAMIC 0.01U M 16V
CT711	613 002 6576	TRIMMER 20P N450
OR	613 002 6583	TRIMMER 20P N750
D7101	407 007 9904	DIODE GMA01-BT
OR	407 012 4406	DIODE 1SS133-T-77
D7102	407 007 9904	DIODE GMA01-BT
OR	407 012 4406	DIODE 1SS133-T-77
D7103	407 007 9904	DIODE GMA01-BT
OR	407 012 4406	DIODE 1SS133-T-77
D7104	407 007 9904	DIODE GMA01-BT
OR	407 012 4406	DIODE 1SS133-T-77
D7105	407 007 9904	DIODE GMA01-BT
OR	407 012 4406	DIODE 1SS133-T-77
D7107	407 007 9904	DIODE GMA01-BT
OR	407 012 4406	DIODE 1SS133-T-77
D7108	407 007 9904	DIODE GMA01-BT
OR	407 012 4406	DIODE 1SS133-T-77
D7110	407 007 9904	DIODE GMA01-BT
OR	407 012 4406	DIODE 1SS133-T-77
D7121	407 007 9904	DIODE GMA01-BT
D7122	407 007 9904	DIODE GMA01-BT
OR	407 012 4406	DIODE 1SS133-T-77
D7125	407 007 9904	DIODE GMA01-BT
D7127	407 007 9904	DIODE GMA01-BT

LOCATION	PARTS NO.	DESCRIPTION
D7127	407 012 4406	DIODE 1SS133-T-77
D7131	407 112 8007	LED BR5534S
IC711	409 173 1805	IC M50959-133SP
IC712	409 032 3308	IC MN1280-L
R7101	401 012 9201	CARBON 1M JA 1/4W
R7102	401 012 9904	CARBON 10M JA 1/4W
R7103	401 018 5702	CARBON 330K JA 1/4W
R7104	401 012 5609	CARBON 1K JA 1/4W
R7106	401 012 5609	CARBON 1K JA 1/4W
R7108	401 012 5609	CARBON 1K JA 1/4W
R7110	401 012 5609	CARBON 1K JA 1/4W
R7113	401 012 5609	CARBON 1K JA 1/4W
R7116	401 016 4707	CARBON 22K JA 1/4W
R7117	401 012 6903	CARBON 10K JA 1/4W
R7118	401 012 5609	CARBON 1K JA 1/4W
R7119	401 012 5609	CARBON 1K JA 1/4W
R7120	401 012 5609	CARBON 1K JA 1/4W
R7122	401 012 5609	CARBON 1K JA 1/4W
R7123	401 012 5609	CARBON 1K JA 1/4W
R7124	401 018 4804	CARBON 33K JA 1/4W
R7125	401 012 5609	CARBON 1K JA 1/4W
R7180	401 018 2701	CARBON 330 JA 1/4W
RB711	613 017 2877	RESISTOR PACK 10K X6 J
OR	613 079 5892	R-NETWORK,10KX6
RB712	613 017 2853	RESISTOR PACK 10K X4 J
OR	613 079 5878	R-NETWORK,10KX4
RR711	613 000 2204	REMOCON RECEIVER
S7101	613 006 3762	PUSH SWITCH
S7102	613 006 3762	PUSH SWITCH
S7103	613 077 4354	PUSH SWITCH
S7106	613 077 4354	PUSH SWITCH
S7108	613 077 4354	PUSH SWITCH
S7113	613 006 3991	PUSH SWITCH
S7114	613 006 3762	PUSH SWITCH
S7118	613 077 4354	PUSH SWITCH
S7120	613 077 4354	PUSH SWITCH
S7125	613 006 3762	PUSH SWITCH
S7126	613 006 3762	PUSH SWITCH
S7129	613 077 4354	PUSH SWITCH
S7130	613 077 4354	PUSH SWITCH
S7137	613 077 4354	PUSH SWITCH
X7101	613 022 4569	CRYSTAL 6.291456MHZ
X7102	613 002 8457	CRYSTAL 32.768KHZ
OR	613 002 8594	CRYSTAL 32.768KHZ

COMPL,TM-2

COMPL.NO. 613 083 0616

VR721	613 079 2495	VR,ROTARY 10KB

COMPL,TM-3

COMPL.NO. 613 081 4753

B7301	405 003 7603	TR 2SA1345-AC
OR	405 000 2205	TR DTA144ES-DCTP
B7302	405 018 2501	TR 2SC3399-AC
OR	405 000 6104	TR DTC144ES-DCTP
C7301	403 042 7707	ELECT 22U M 16V
C7302	403 048 4205	ELECT 0.33U M 50V
C7303	403 041 8804	ELECT 10U M 16V
C7304	403 048 4205	ELECT 0.33U M 50V
C7305	403 001 5003	CERAMIC 2200P K 16V
C7306	403 069 1207	CERAMIC 1000P K 50V
C7307	403 042 7707	ELECT 22U M 16V
C7308	403 121 9509	CERAMIC 0.1U Z 50V
C7311	403 155 2804	DL-ELECT 0.047F Z 5.5V
D7301	407 007 9904	DIODE GMA01-BT
OR	407 012 4406	DIODE 1SS133-T-77
IC731	409 114 4308	IC LA7214
PR731	613 000 2297	CIRCUIT PROTECTOR
Q7301	405 009 7003	TR 2SB985-T-AE
Q7302	405 057 6409	TR 2SC4038-R-TL2
OR	405 057 6300	TR 2SC4038-S-TL2
Q7303	405 027 8709	TR 2SK68A-K
OR	405 057 9301	TR 2SK68A-L1
R7301	401 020 2805	CARBON 47K JA 1/4W
R7302	401 013 5202	CARBON 1.2K JA 1/4W
R7303	401 012 5609	CARBON 1K JA 1/4W
R7304	401 012 6903	CARBON 10K JA 1/4W
R7305	401 012 9201	CARBON 1M JA 1/4W
R7308	401 012 6903	CARBON 10K JA 1/4W
R7309	401 020 3802	CARBON 470K JA 1/4W
R7310	401 018 5702	CARBON 330K JA 1/4W
R7311	401 018 2701	CARBON 330 JA 1/4W
R7312	401 018 5702	CARBON 330K JA 1/4W
R7313	401 017 3709	CARBON 270K JA 1/4W
R7314	401 012 8006	CARBON 100K JA 1/4W

LOCATION	PARTS NO.	DESCRIPTION
ACCESSORIES		
	613 085 2465	INSTRUCTION MANUAL
	613 011 7366	CORD
	613 084 7355	REMOCON

LOCATION	PARTS NO.	DESCRIPTION
PACKING MATERIALS		
	613 085 2458	CORR CASE,INNER
	613 081 6863	CUSHION,INNER FRONT
	613 081 6870	CUSHION,INNER BACK
	613 061 6135	IND POLYE COVER

SANYO

SANYO Electric Co., Ltd.
Osaka, Japan

A11300 Oct./'88/2000 NS Printed in Japan

BLOCK DIAGRAMS, CIRCUIT DIAGRAMS & PRINTED CIRCUIT BOARDS

VHR-D4610E (U.K.)

TABLE OF CONTENTS

————	OVERALL WIRING DIAGRAM	
————	SYSTEM CONTROL AND SERVO CIRCUIT	A
	BASIC BLOCK DIAGRAM	
————	VIDEO SIGNAL FLOW OVERALL BLOCK DIAGRAM	
————	AUDIO CIRCUIT BASIC BLOCK DIAGRAM	B
————	VIDEO CIRCUIT BASIC BLOCK DIAGRAM	
————	DIGITAL MEMORY CIRCUIT BASIC BLOCK DIAGRAM	C
——— CP-1	MAIN P.C.B.	
COMPL. VD-1	VIDEO CIRCUIT & P.C.B.	
————	MECHANISM CONNECTION CIRCUIT	D
COMPL. VP-1	VIDEO PRE-AMP CIRCUIT & P.C.B.	
COMPL. CP-A, DM-5	VIDEO SIGNAL SELECT CIRCUIT	
————	WAVEFORM OF VIDEO	E
——— DM-5	P.C.B.	
COMPL. AD-1	AUDIO CIRCUIT & P.C.B.	
COMPL. CP-A	(SY-A) SYSTEM CONTROL CIRCUIT	F
COMPL. CP-A	(SV-A) SERVO CIRCUIT	
————	IC305 HIC CIRCUIT	
————	IC351 (LC7418-8076) DIGITAL SERVO IC. INTER BLOCK DIAGRAM	G
————	WAVEFORM OF SERVO	
COMPL. SY-2	AUTO TRACKING & TAPE REMAIN CIRCUIT & P.C.B.	
————	RF CONVERTER CIRCUIT	
COMPL. DM-1	ANALOG PROCESS FOR DIGITAL MEMORY CIRCUIT	H
COMPL. DM-3	DIGITAL MEMORY CIRCUIT	
——— DM-1	ANALOG PROCESS FOR DIGITAL MEMORY P.C.B.	I
——— DM-3	DIGITAL MEMORY P.C.B.	
COMPL. DM-4	DIGITAL MEMORY CONTROL CIRCUIT & P.C.B.	
COMPL. CP-A	(PW-A) POWER SUPPLY CIRCUIT	J
COMPL. PW-1, 2, 3	POWER SUPPLY CIRCUIT & P.C.B.	
COMPL. TM-1, 2	DISPLAY, TIMER, TUNING CONTROL, VR CIRCUIT & P.C.B.	K
COMPL. CP-A	(TM-A) TUNING SELECT CIRCUIT	
COMPL. TM-3	SYNC. SEPARATION CIRCUIT & P.C.B.	
COMPL. TN-1	IF CIRCUIT & P.C.B.	
COMPL. CP-A	(TN-A) TN CONNECTION CIRCUIT	
——— IR-4	IR RECEIVER P.C.B.	L
——— IR-1	IR SOUND REMOTE ADAPTER P.C.B.	
——— IR-3	IR SOUND P.C.B.	
COMPL. IR-1	IR SOUND REMOTE ADAPTER CIRCUIT	M
COMPL. IR-3, 4	IR SOUND RECEIVER CIRCUIT	
COMPL. RM-1	IR REMOTE CONTROL CIRCUIT & P.C.B.	N

NOTES:

1. All resistance values in "OHMS" unless otherwise noted. (K=1,000 M=1,000,000)
2. All capacitance values in "μfd" unless otherwise noted. p=pico farad
3. All inductance values in "mH" unless otherwise noted. μ=micro henry

PRODUCT SAFETY NOTICE

THE COMPONENTS DESIGNATED BY A SYMBOL (⚠) IN THIS SCHEMATIC DIAGRAM DESIGNATES COMPONENTS WHOSE VALUE ARE OF SPECIAL SIGNIFICANCE TO PRODUCT SAFETY. SHOULD ANY COMPONENT DESIGNATED BY A SIMBOL NEED TO BE REPLACED, USE ONLY THE PART DESIGNATED IN THE PARTS LIST. DO NOT DEVIATE FROM THE RESISTANCE, WATTAGE AND VOLTAGE RATINGS SHOWN.

OVERALL WIRING DIAGRAM

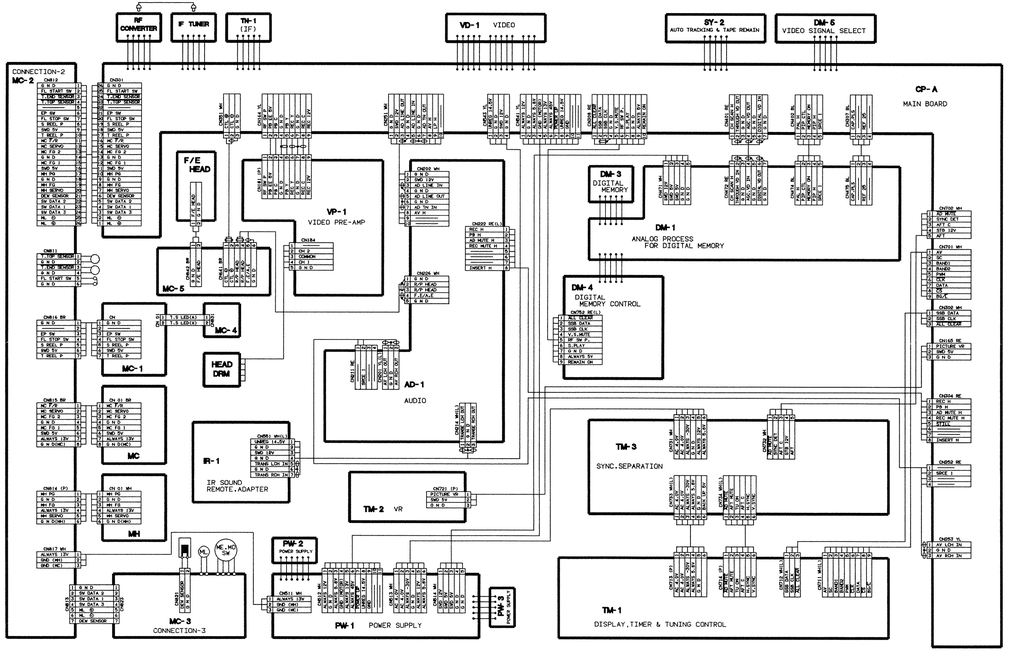

SYSTEM CONTROL AND SERVO CIRCUIT BASIC BLOCK DIAGRAM

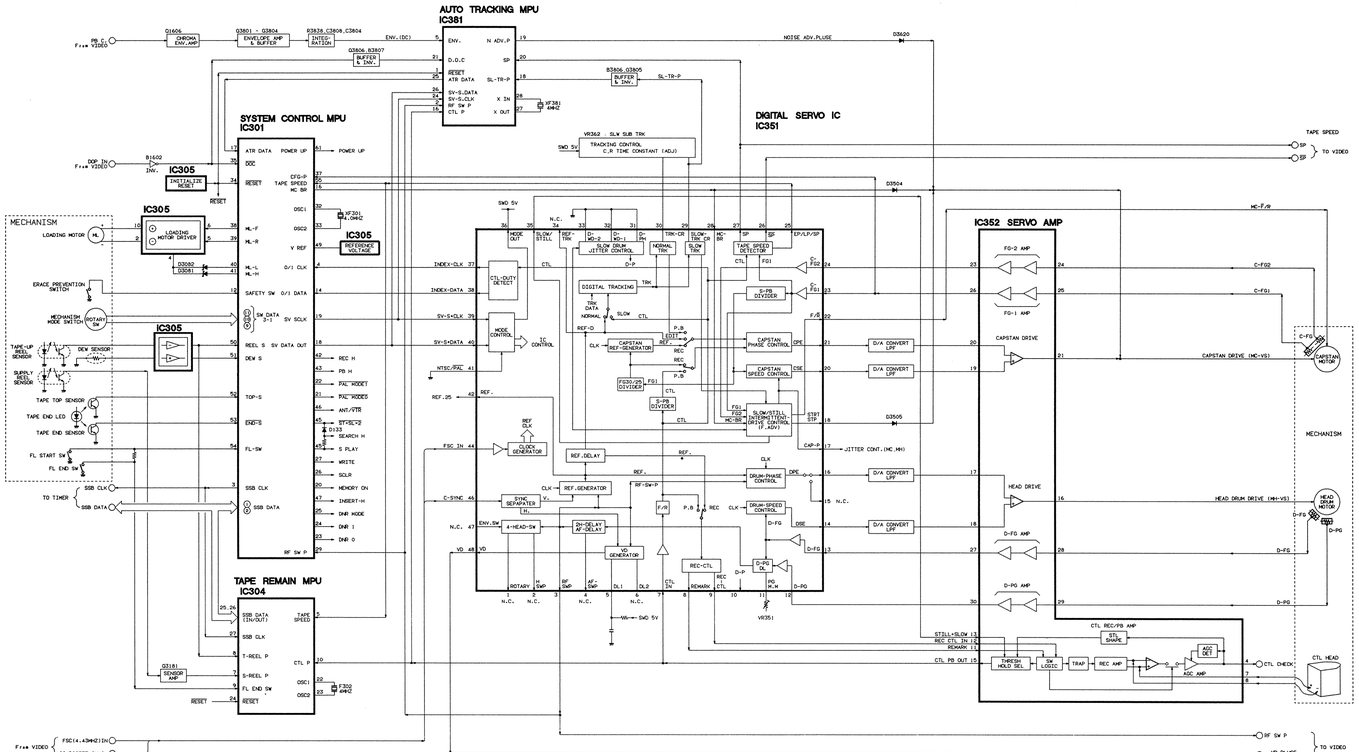

VIDEO SIGNAL FLOW OVERALL BLOCK DIAGRAM

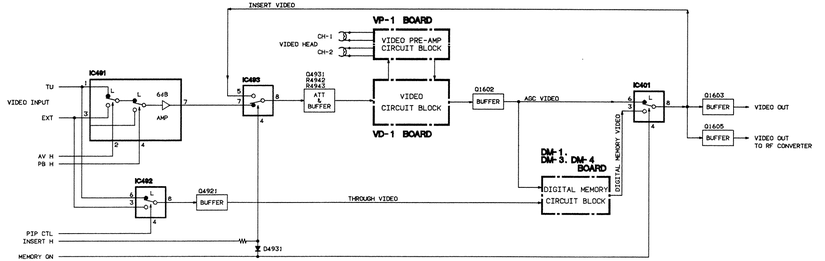

AUDIO CIRCUIT BASIC BLOCK DIAGRAM

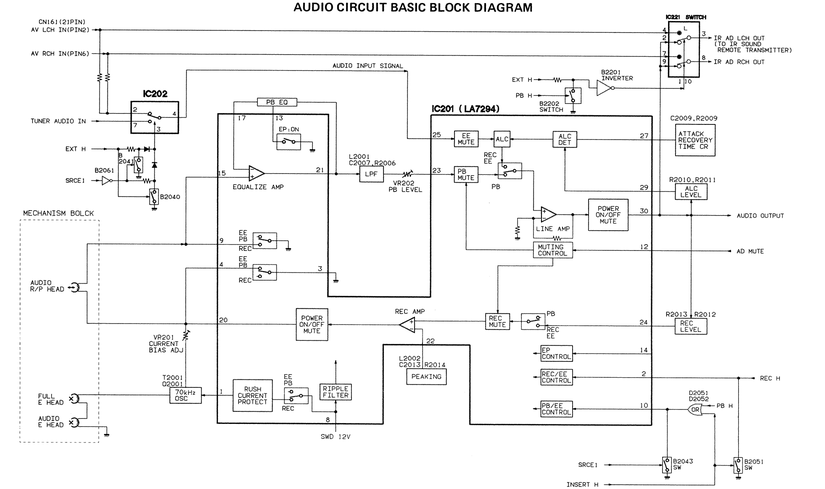

Ⓑ VHR-D4610E

VIDEO CIRCUIT BASIC BLOCK DIAGRAM

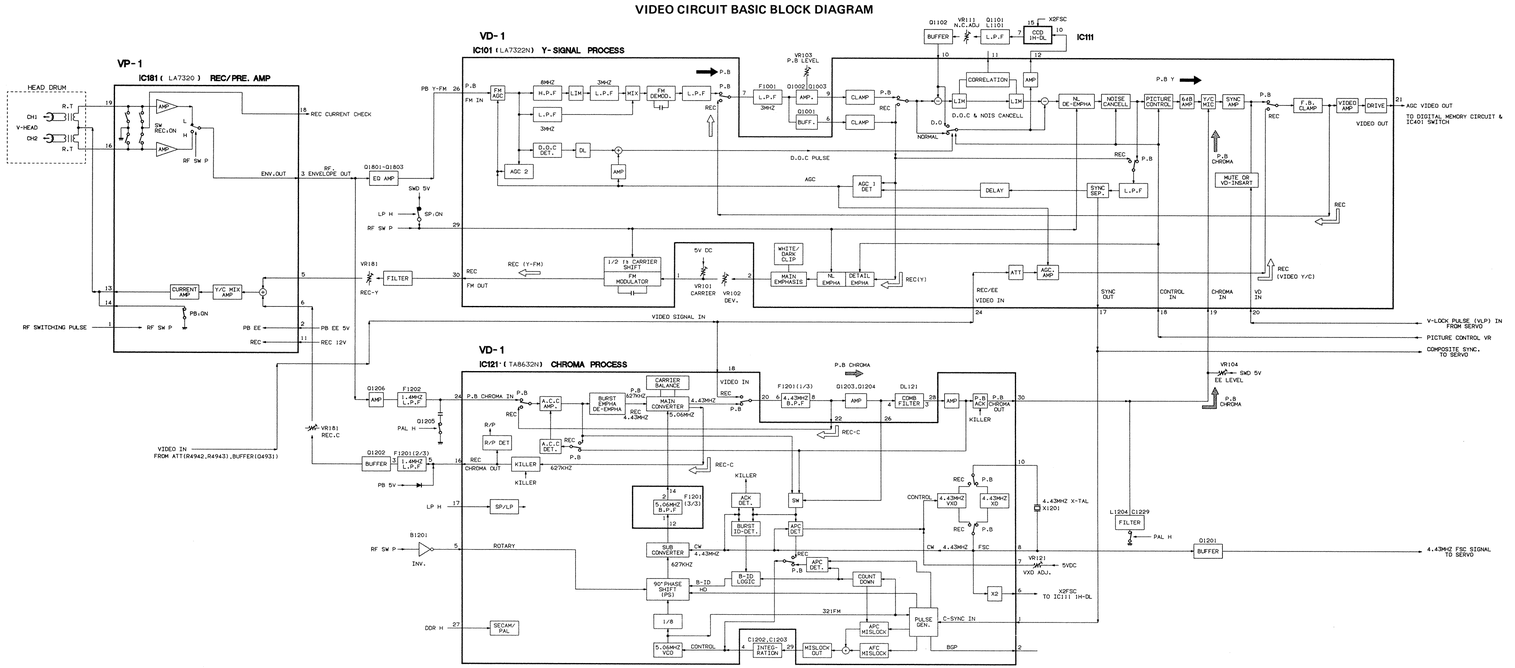

DIGITAL MEMORY CIRCUIT BASIC BLOCK DIAGRAM

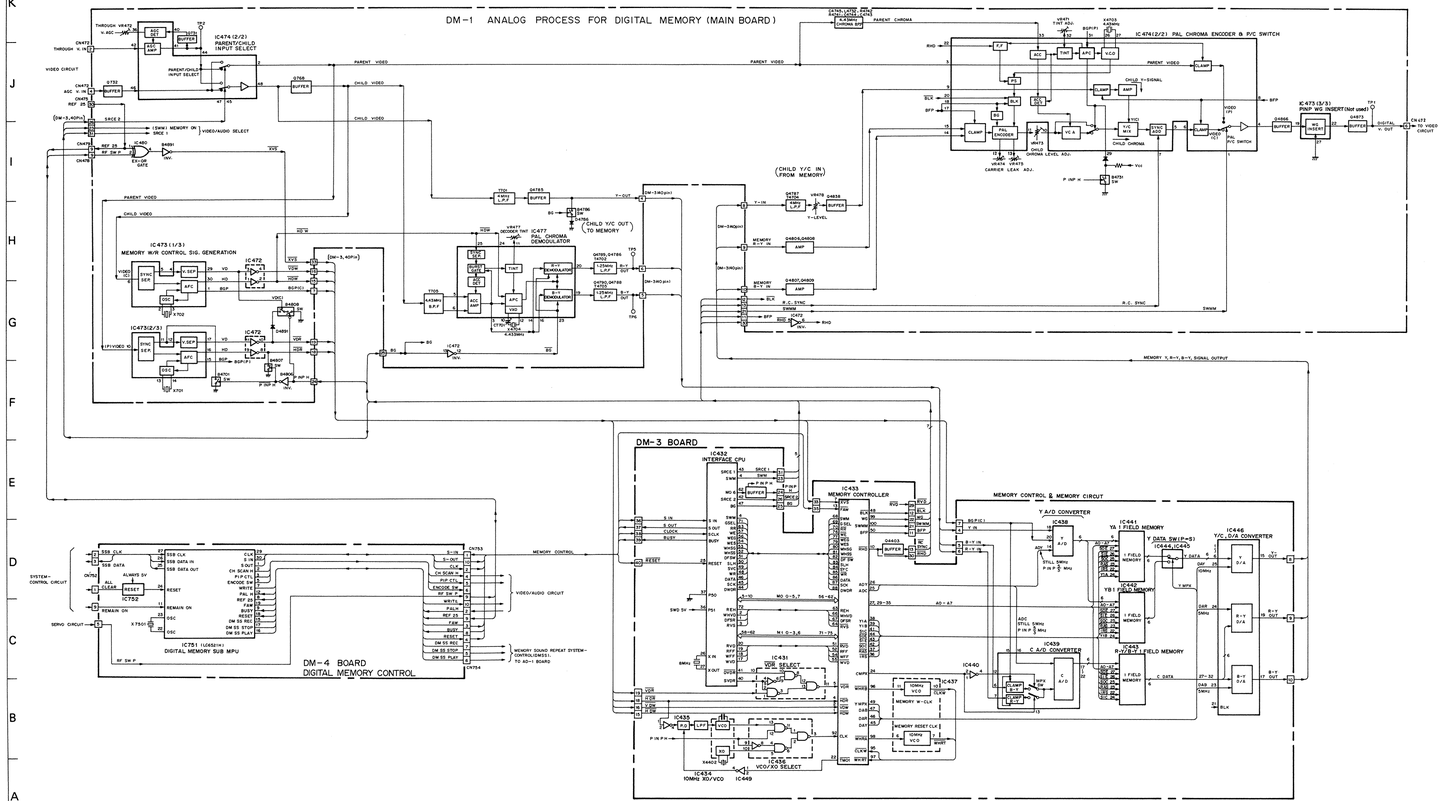

CP-1 MAIN P.C.B.

NOTE: BOTTOM SIDE FOIL
TOP SIDE FOIL

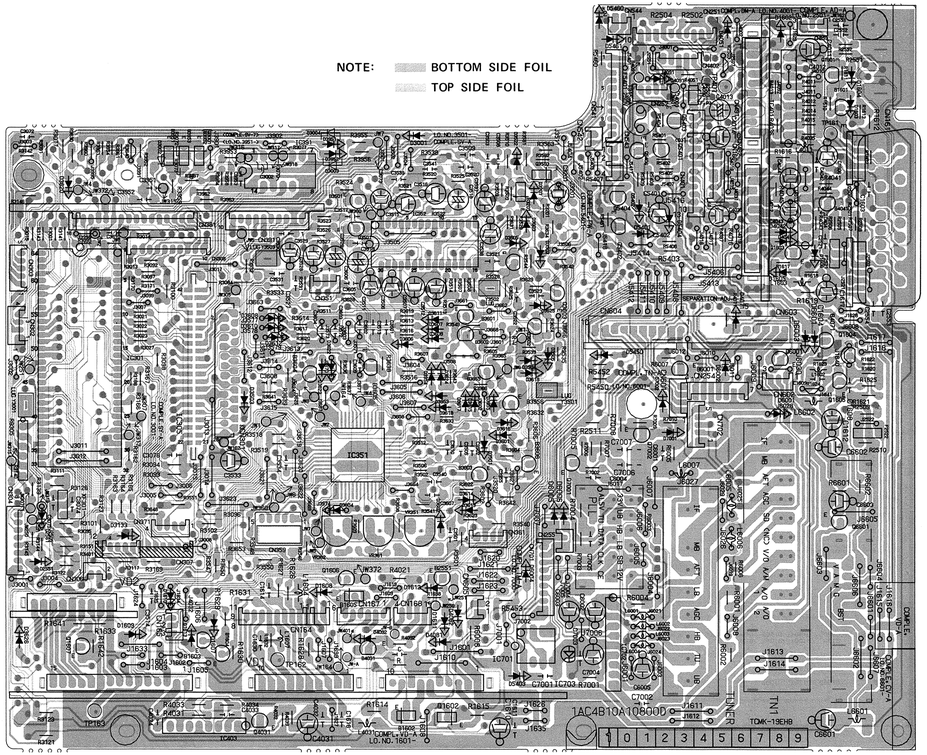

VHR-D4610E

COMPL. VD-1 VIDEO CIRCUIT

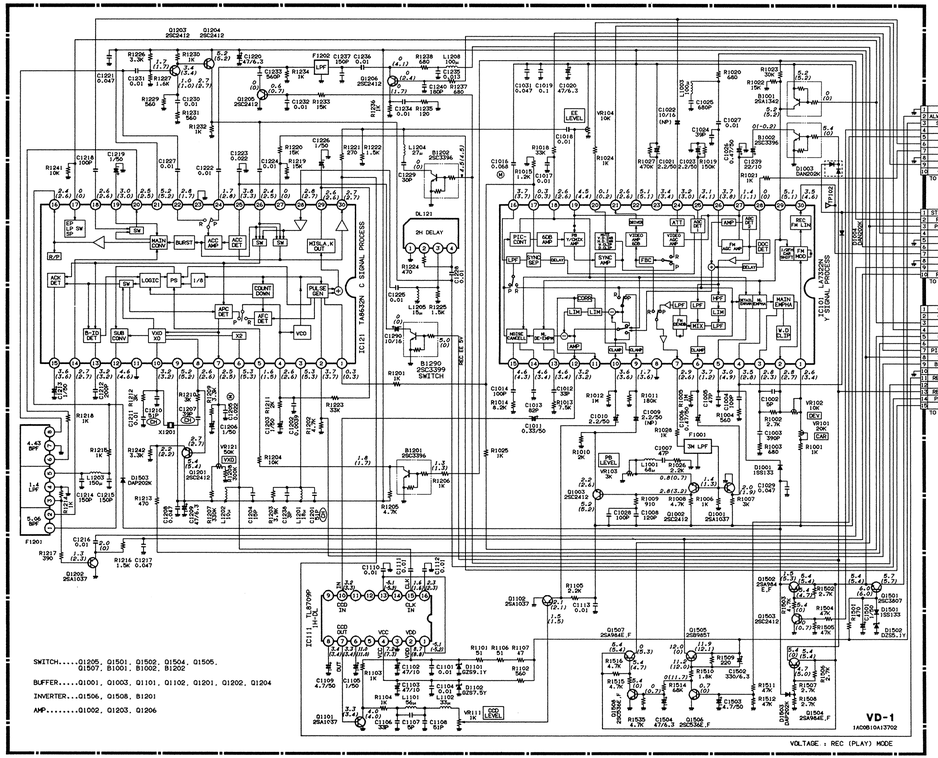

VD-1 VIDEO P.C.B.

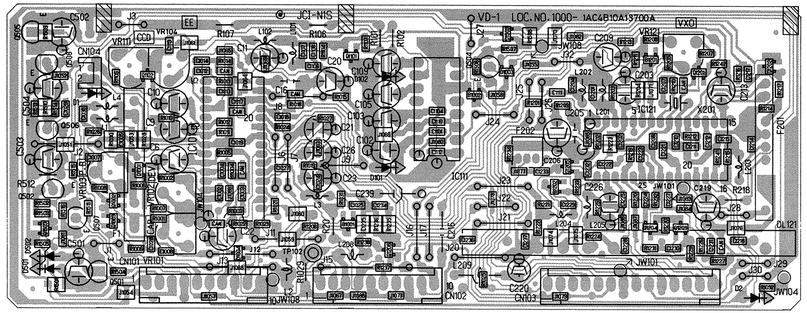

COMPL. VP-1 VIDEO PRE-AMP CIRCUIT & P.C.B.

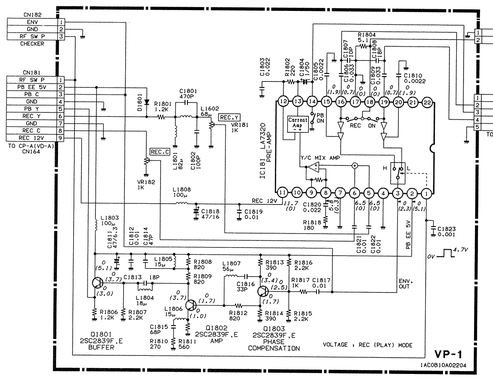

MECHANISM CONNECTION CIRCUIT

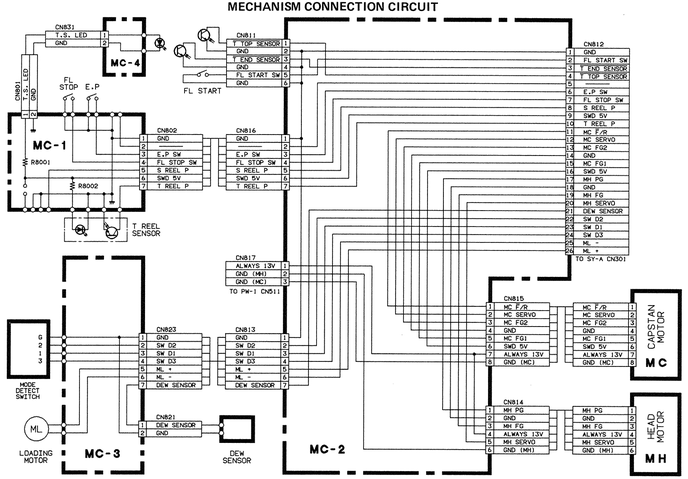

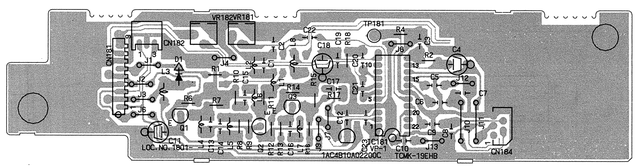

VHR-D4610E

COMPL. CP-A, DM-5 VIDEO SIGNAL SELECT CIRCUIT
(INCLUDES VD-A, AD-A, DM-A, CV-A & DM-5 CIRCUITS)

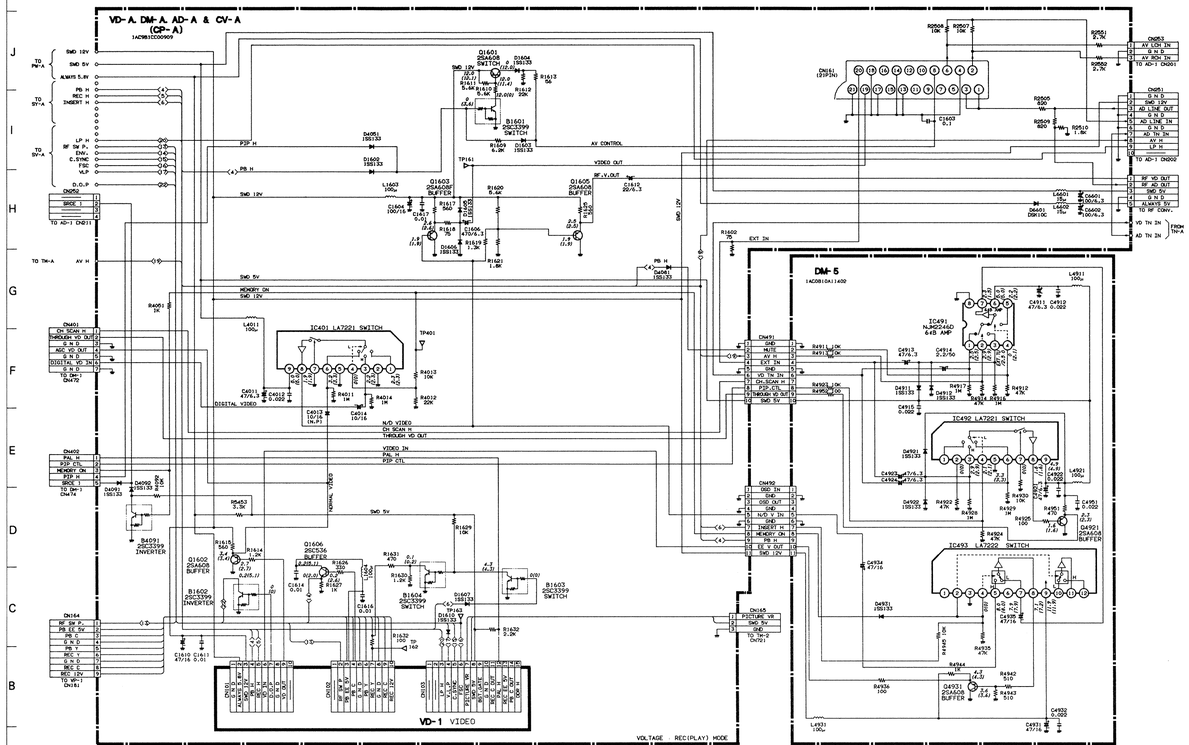

WAVEFORM OF VIDEO

Pin No.		
IC101 (2)		REC 1.2 Vp-p (200 mV/div)
(6)		REC 500 m Vp-p (100 mV/div)
(6)		PLAY 300 m Vp-p (100 mV/div)
(9) (10)		PLAY 500 m Vp-p (100 mV/div)
(17)		4 Vp-p 15.625 KHz (1 V/div)
(18)		PLAY 320 m Vp-p (100 mV/div)
(26)		PLAY 400 m Vp-p (100 mV/div)
(30)		REC 1.5 Vp-p (500 mV/div)
TP161 (CP-1)		PLAY 1 Vp-p (200 mV/div)

DM-5 P.C.B.

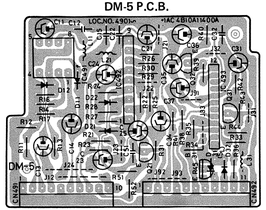

COMPL. AD-1 AUDIO CIRCUIT & P.C.B.

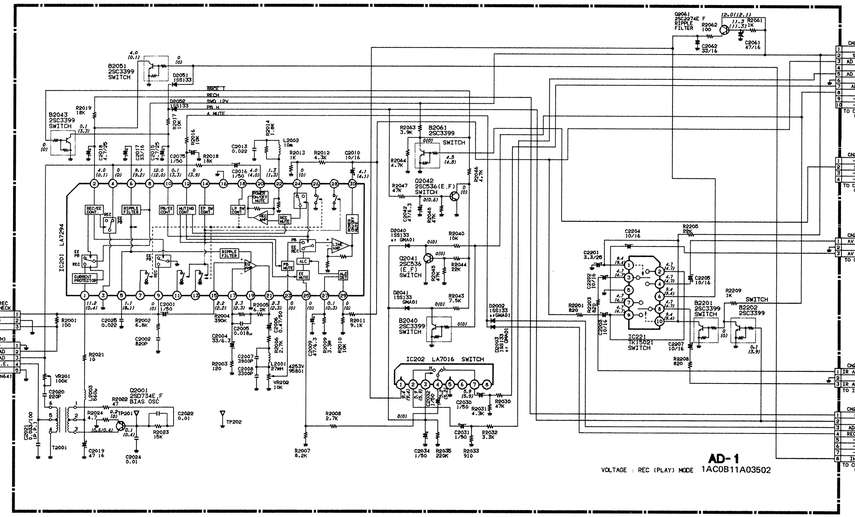

VHR-D4610E

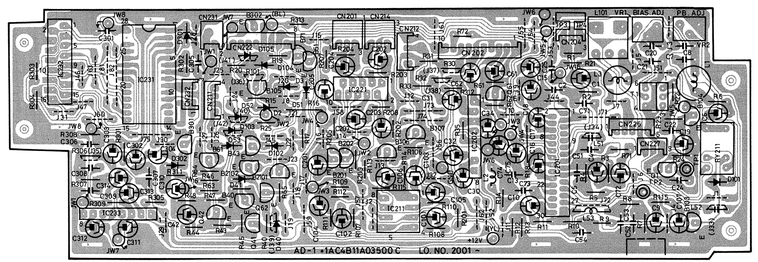

COMPL. CP-A (SY-A) SYSTEM CONTROL CIRCUIT

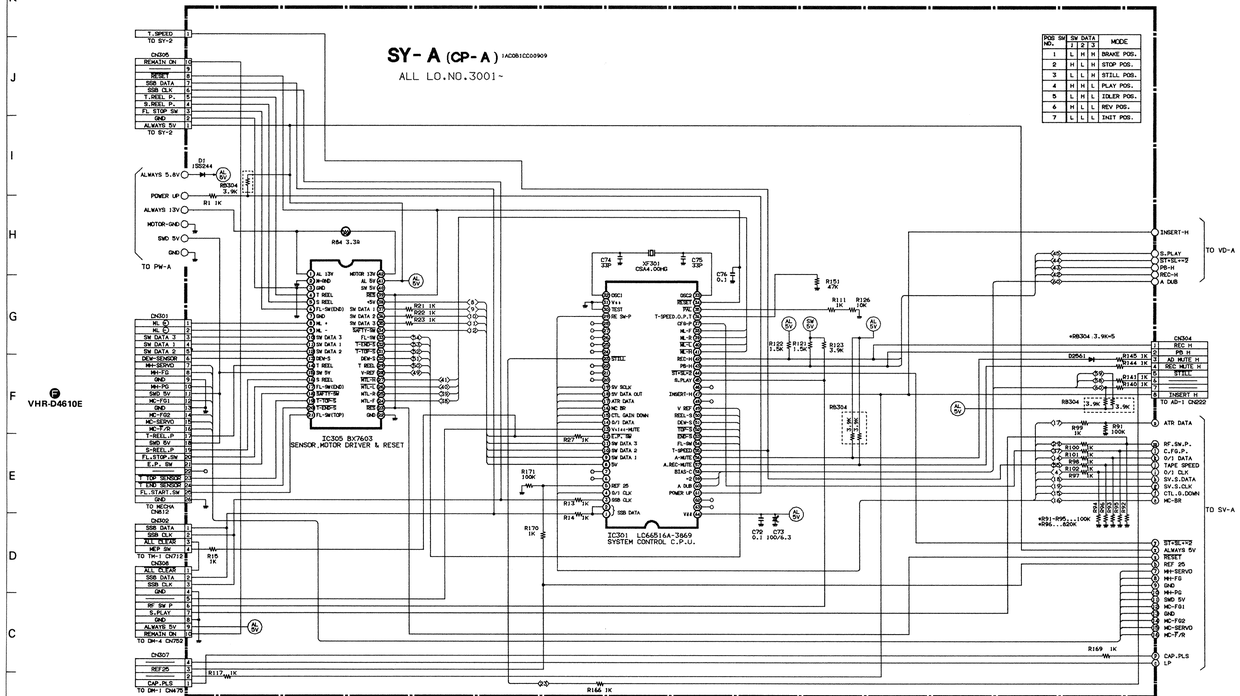

POS SW NO.	SW DATA 1	2	3	MODE
1	L	L	H	BRAKE POS.
2	H	L	H	STOP POS.
3	L	L	H	STILL POS.
4	H	H	L	PLAY POS.
5	L	H	L	IDLER POS.
6	H	L	L	REV POS.
7	L	L	L	INIT POS.

COMPL. CP-A (SV-A) SERVO CIRCUIT

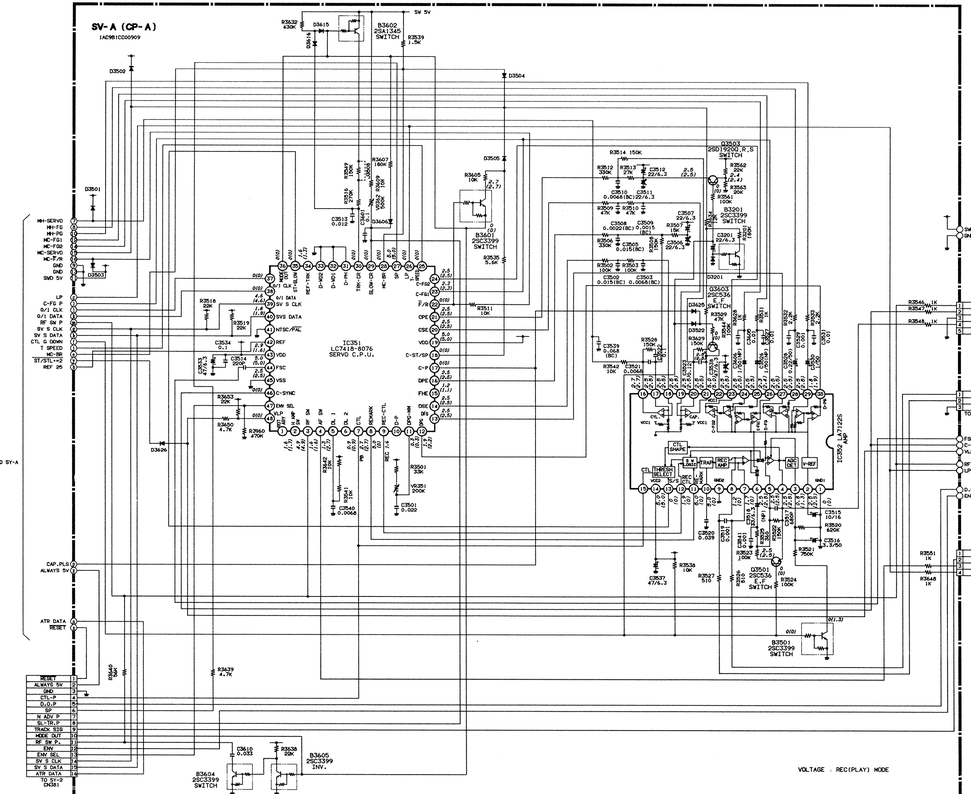

IC305 HIC CIRCUIT

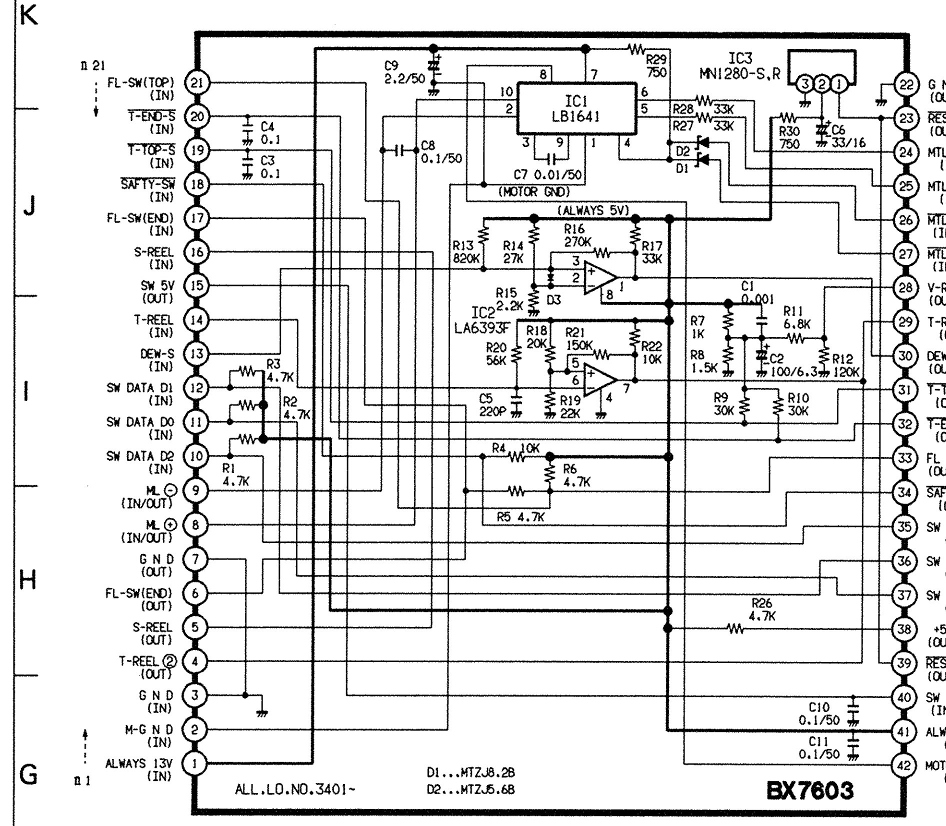

IC351 (LC7418-8076) DIGITAL SERVO IC. INTER BLOCK DIAGRAM

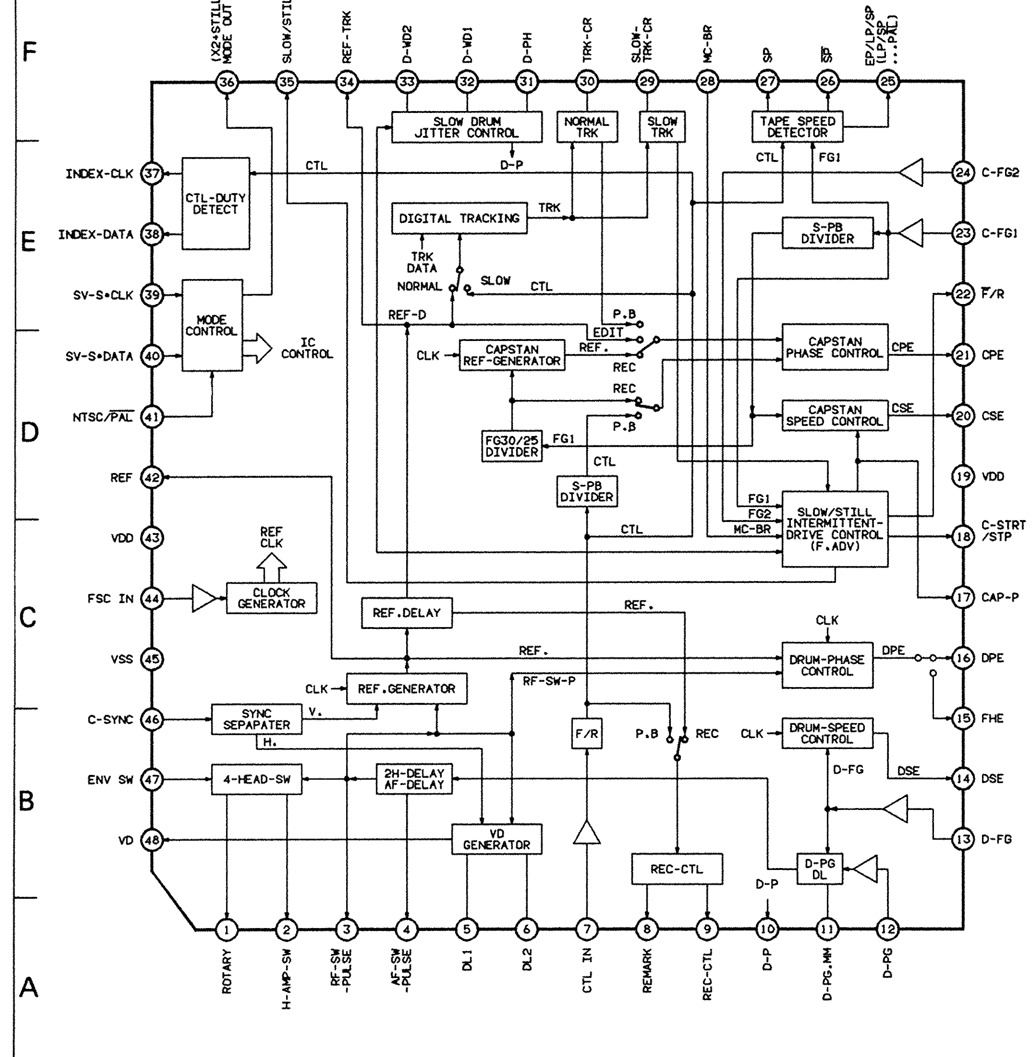

WAVEFORM OF SERVO

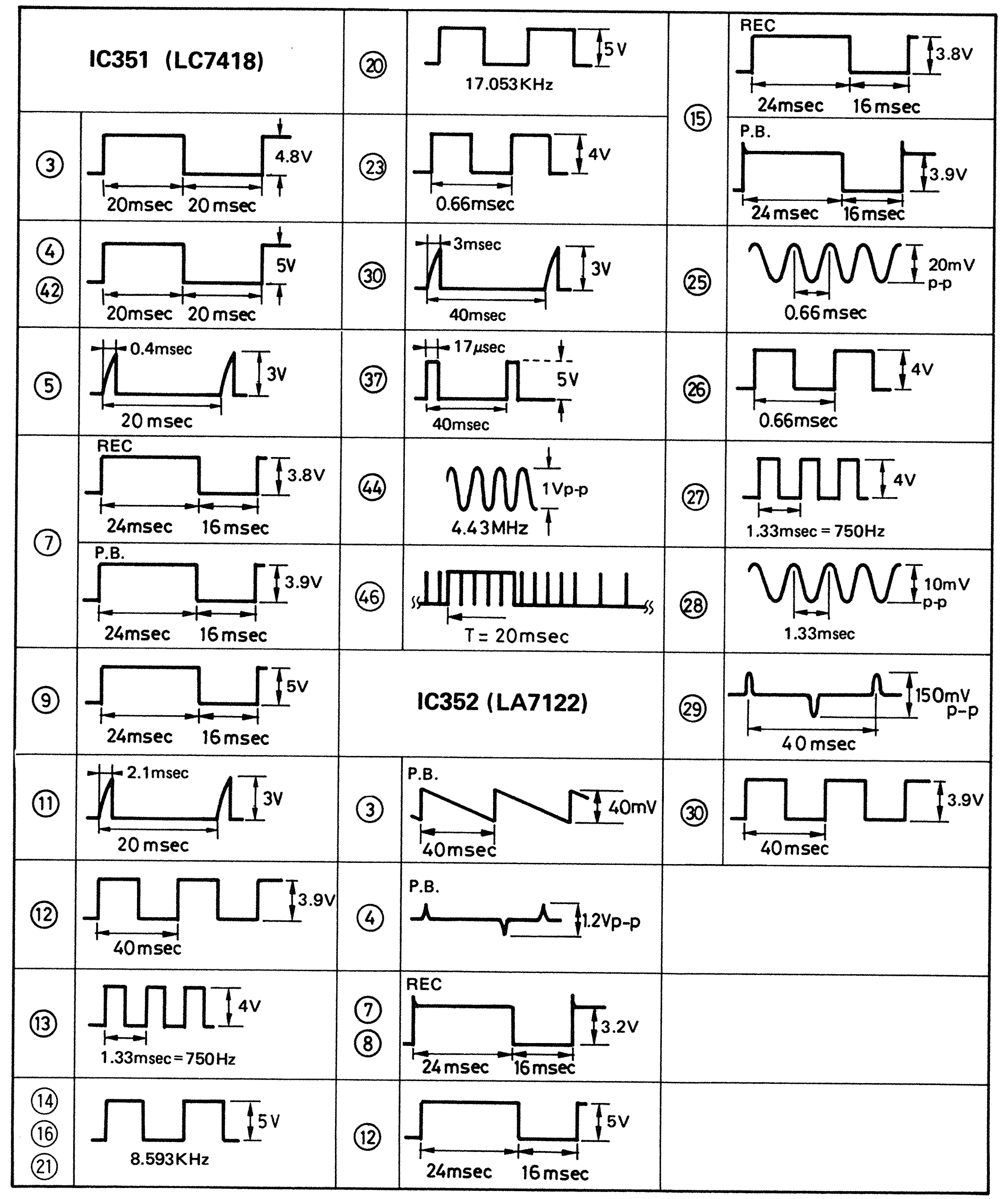

COMPL. SY-2 AUTO TRACKING & TAPE REMAIN CIRCUIT & P.C.B.

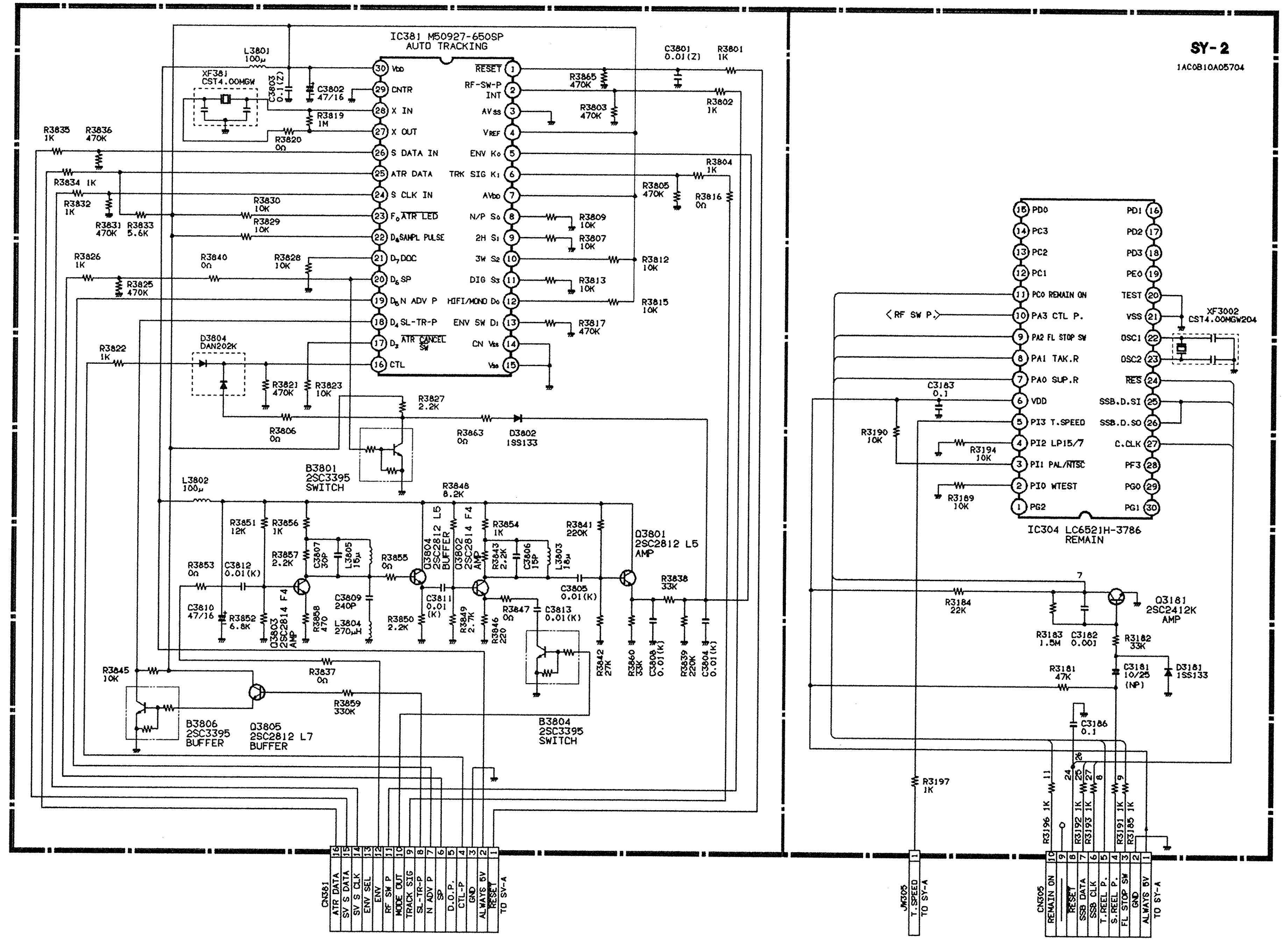

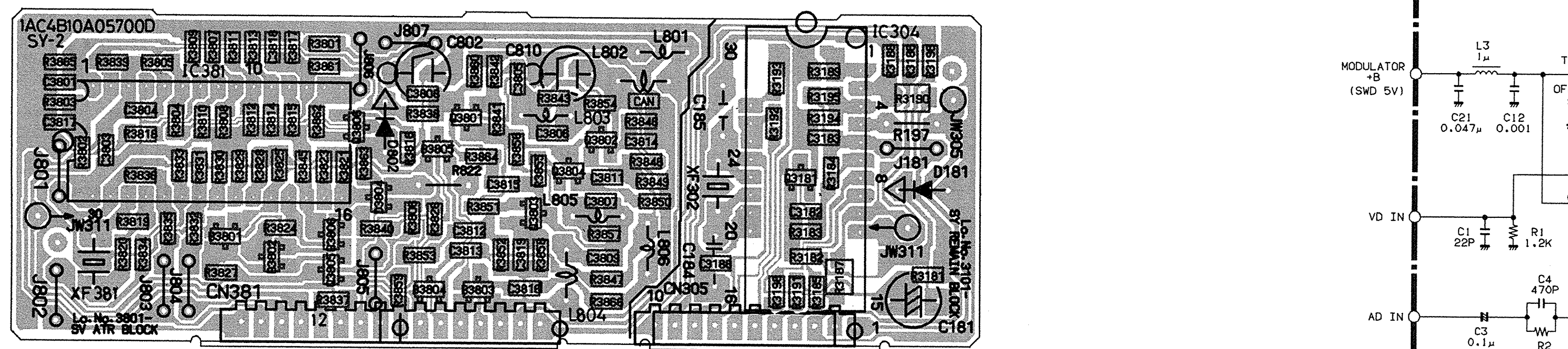

RF CONVERTER CIRCUIT

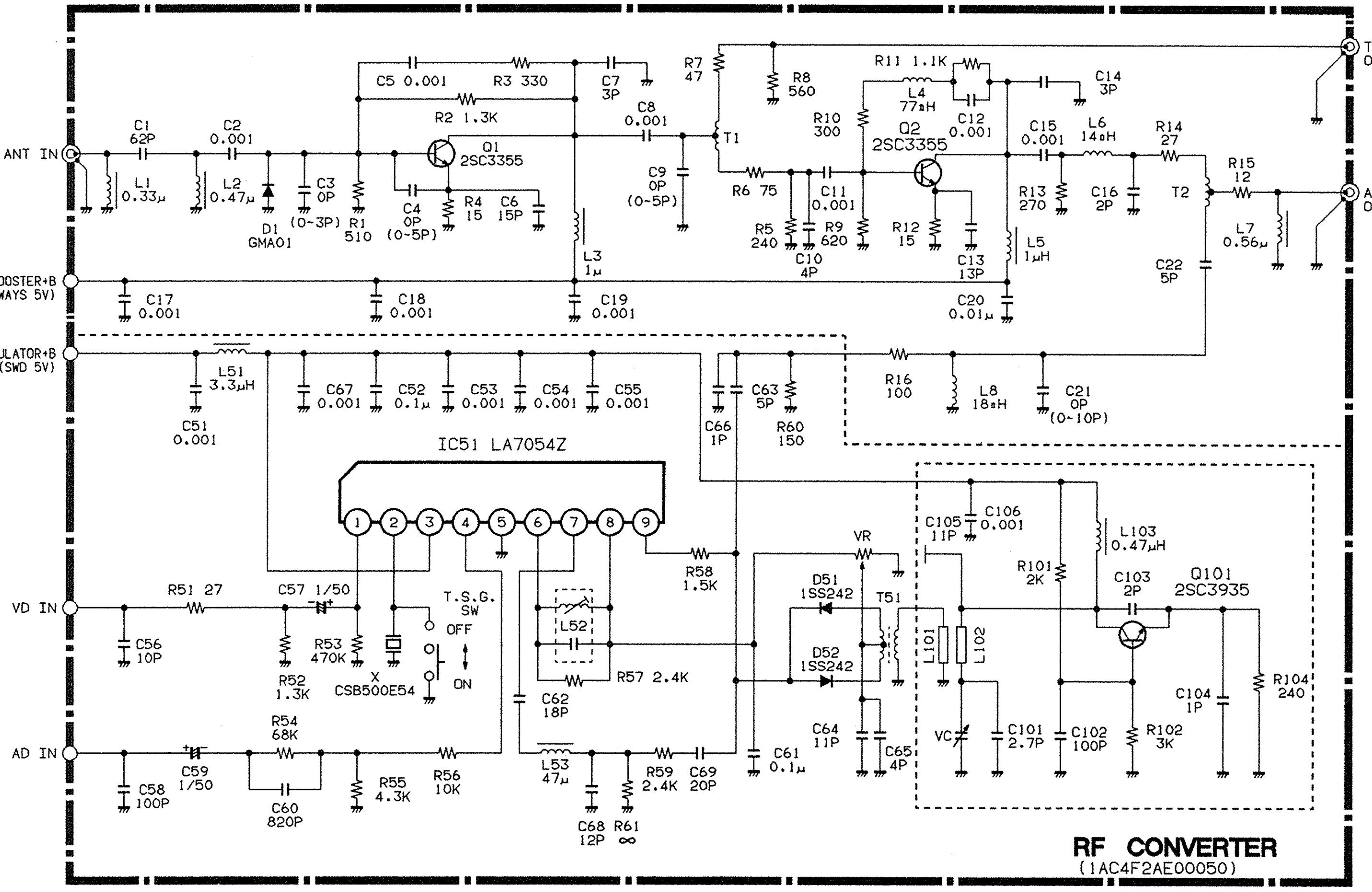

VHR-D4610E

RF CONVERTER CIRCUIT

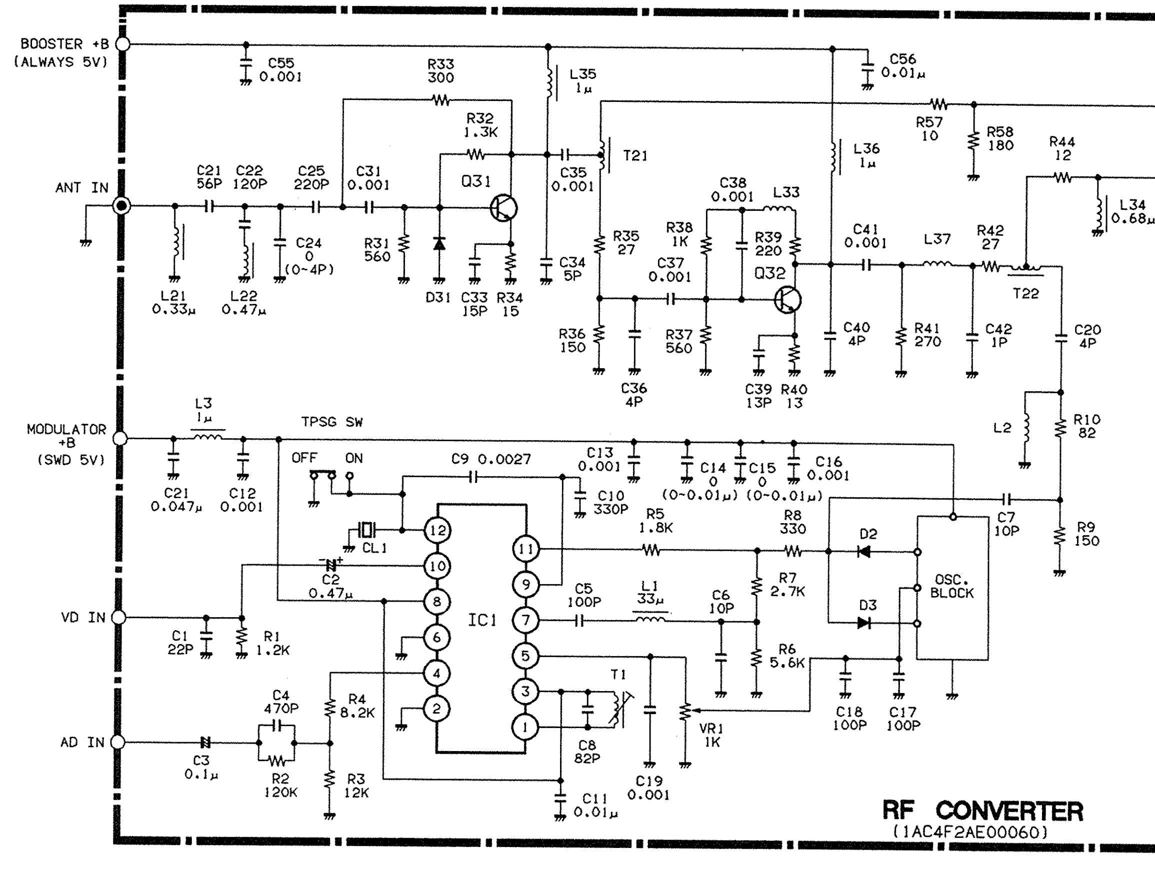

NOTE

IC1 : AJ7080

Q61 : 2SC2480 OR EQUIVALENT
D2.D3 : HSM276 OR EQUIVALENT
D31 : 1SS133.1SS83 OR EQUIVALENT

OSC BLOCK

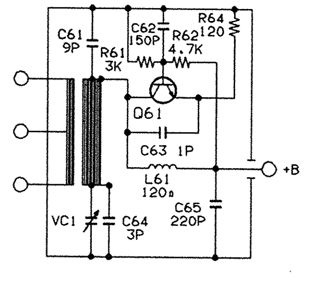

COMPL. DM-1 ANALOG PROCESS FOR DIGITAL MEMORY CIRCUIT

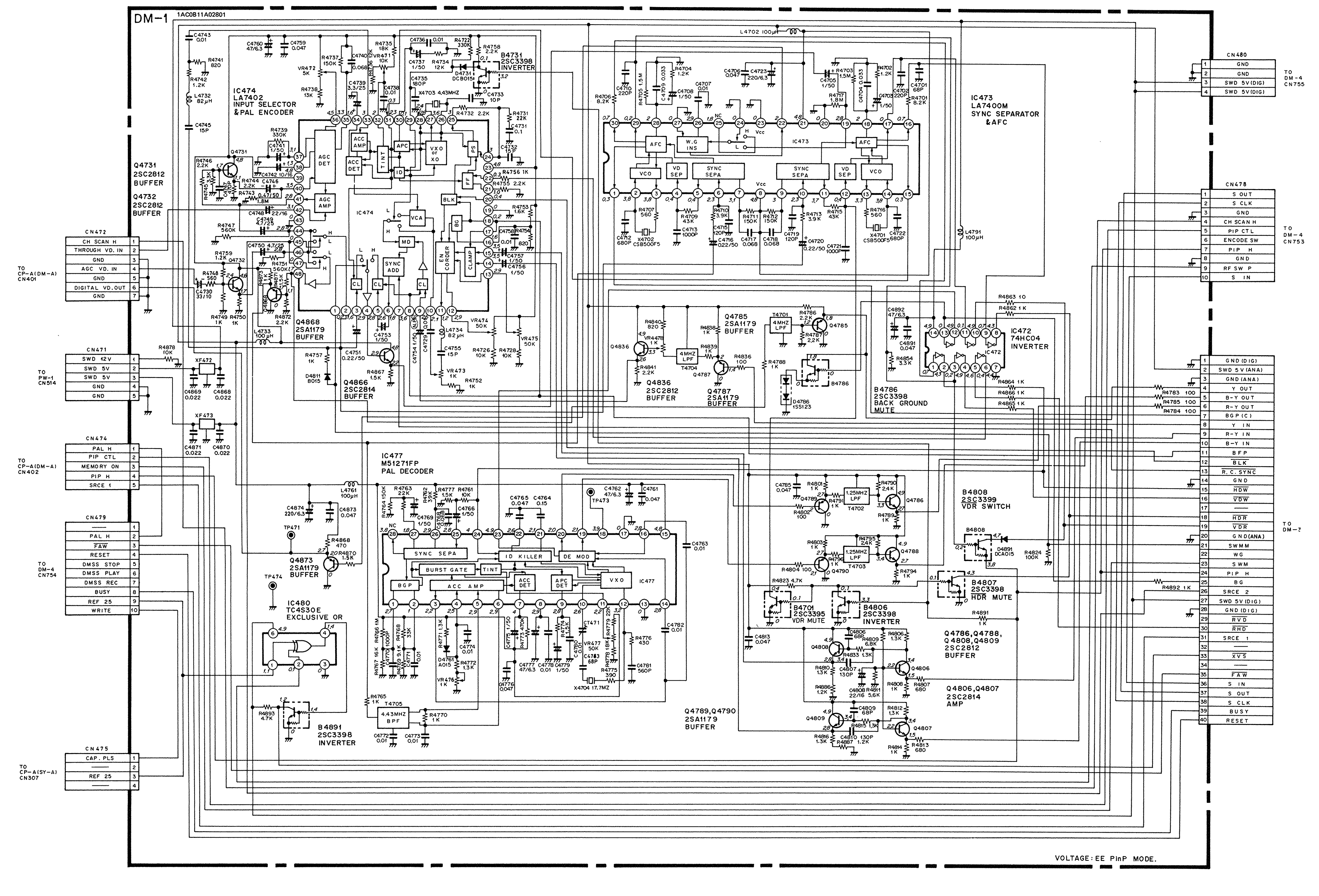

COMPL. DM-3 DIGITAL MEMORY CIRCUIT

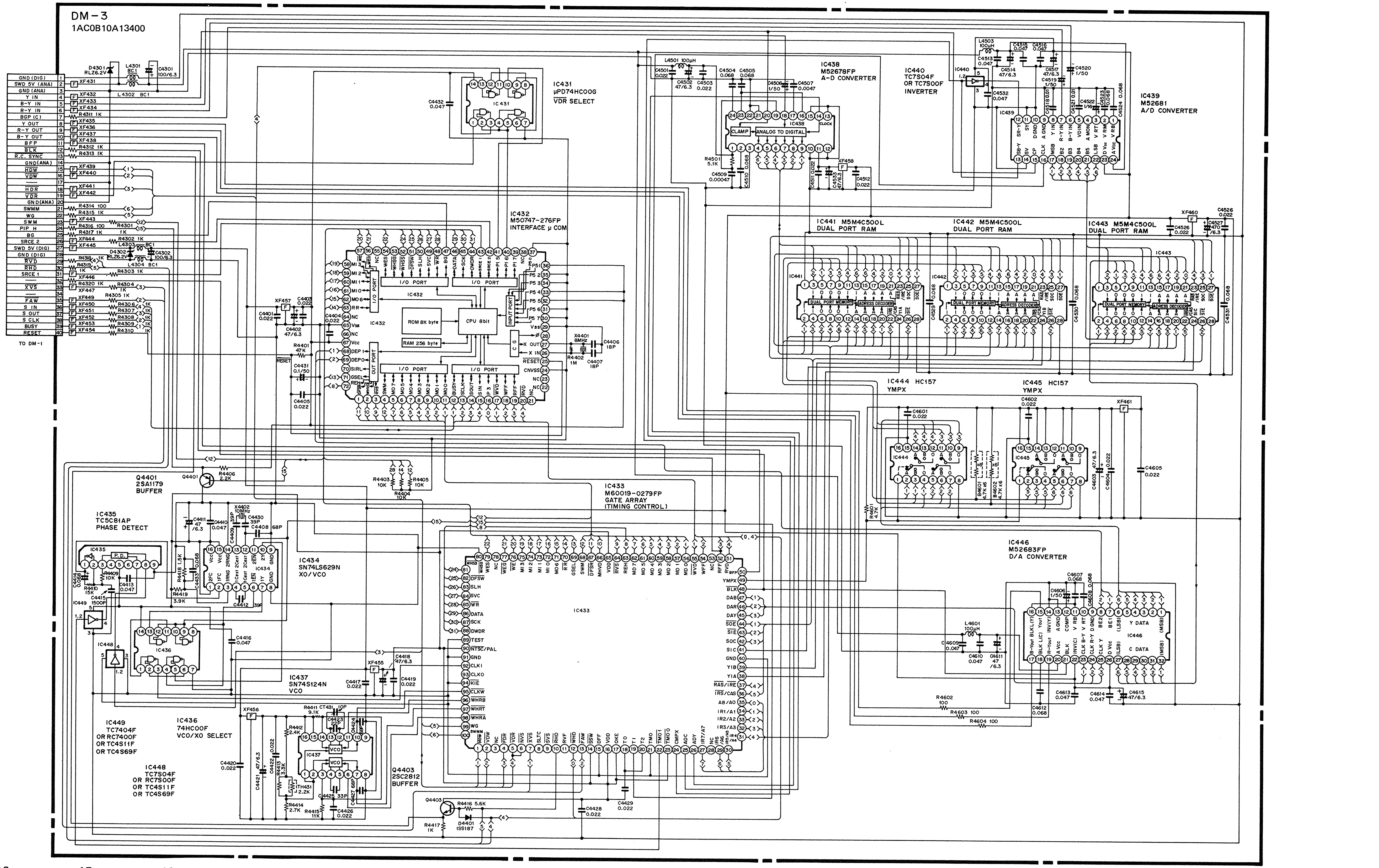

DM-1 ANALOG PROCESS FOR DIGITAL MEMORY P.C.B. (TOP SIDE VIEW)

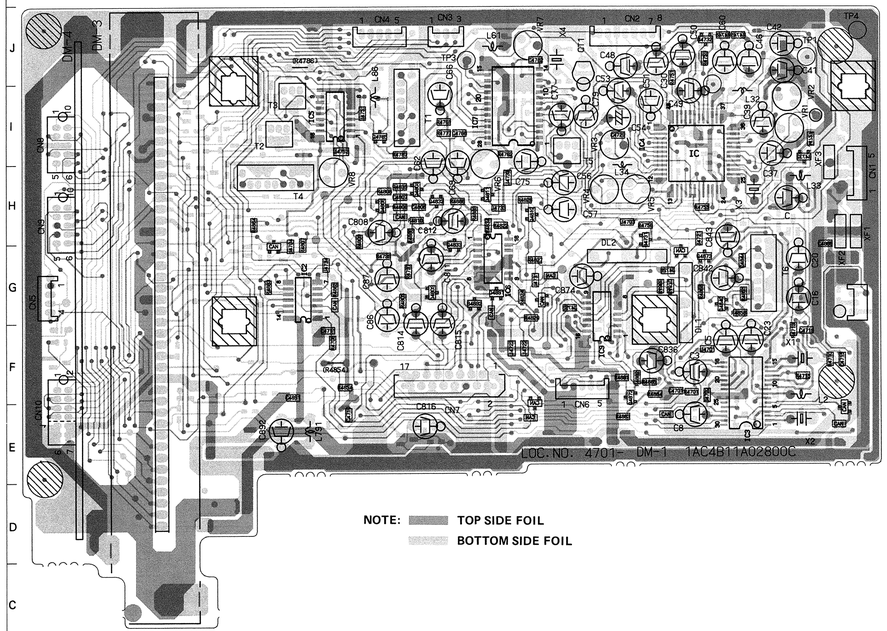

DM-1 ANALOG PROCESS FOR DIGITAL MEMORY P.C.B. (BOTTOM SIDE VIEW)

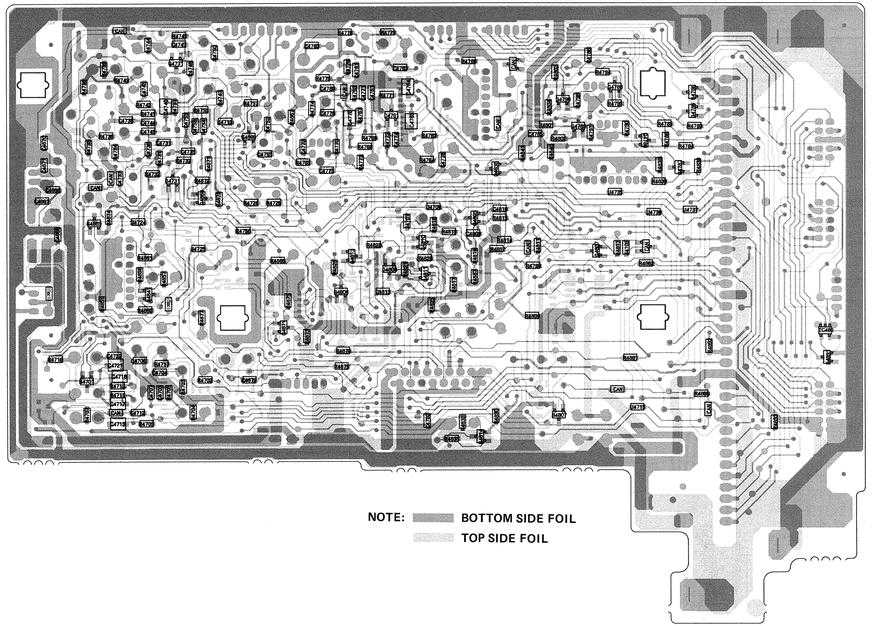

DM-3 DIGITAL MEMORY P.C.B. (SIDE A)

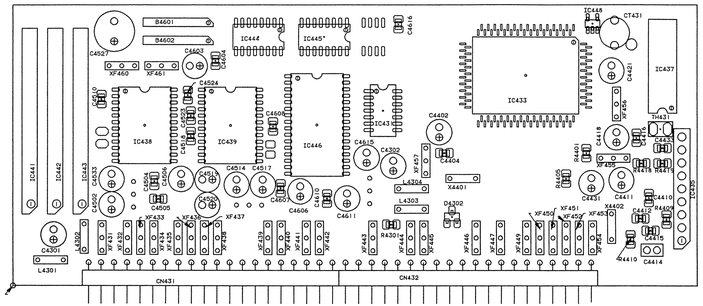

DM-3 DIGITAL MEMORY P.C.B. (SIDE B)

VHR-D4610E

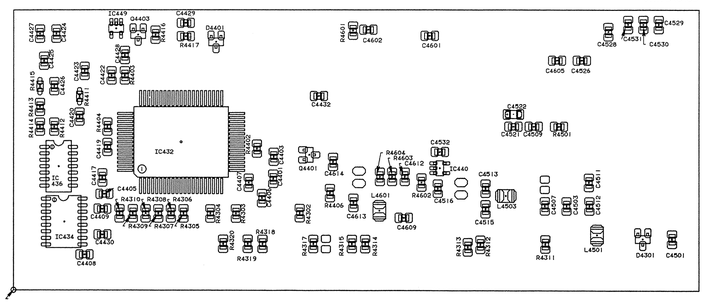

COMPL. DM-4 DIGITAL MEMORY CONTROL CIRCUIT

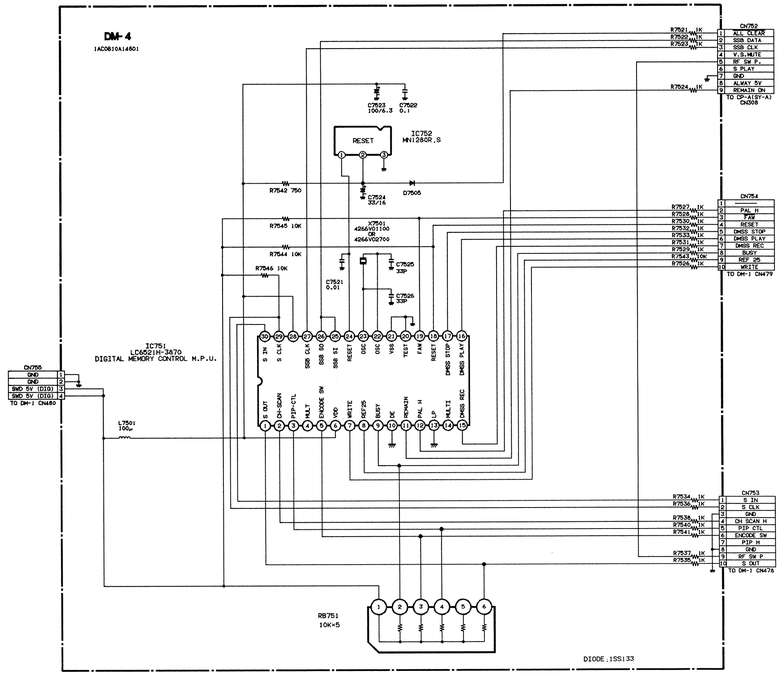

VHR-D4610E

DM-4 DIGITAL MEMORY CONTROL P.C.B.

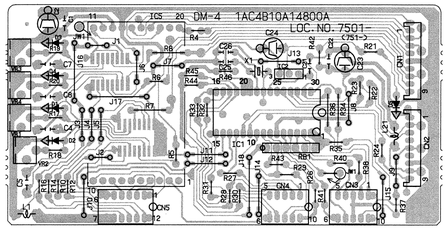

COMPL. CP-A (PW-A) POWER SUPPLY CIRCUIT

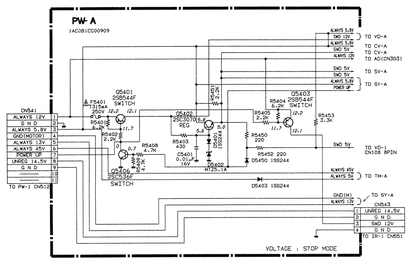

COMPL. PW-1, 2, 3 POWER SUPPLY CIRCUIT

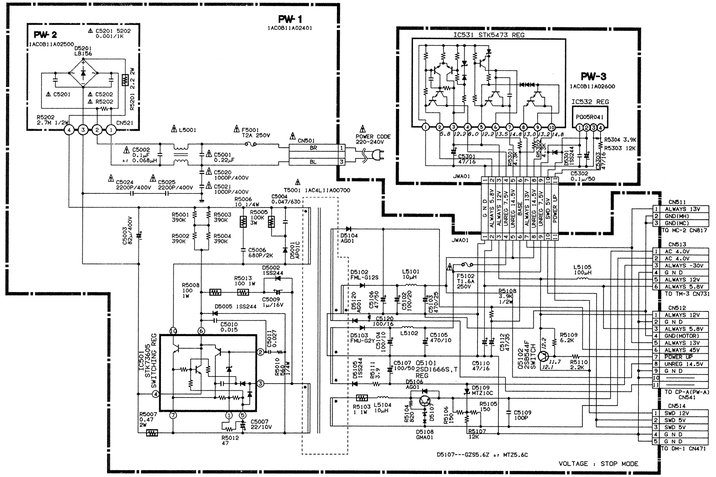

PW-2 POWER SUPPLY P.C.B.

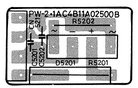

PW-3 POWER SUPPLY P.C.B.

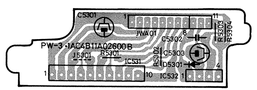

PW-1 POWER SUPPLY P.C.B.

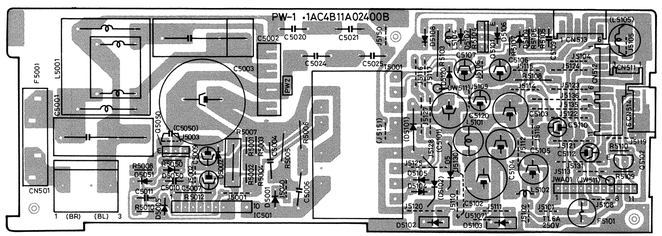

COMPL. TM-1, 2 DISPLAY, TIMER, TUNING CONTROL & VR CIRCUIT

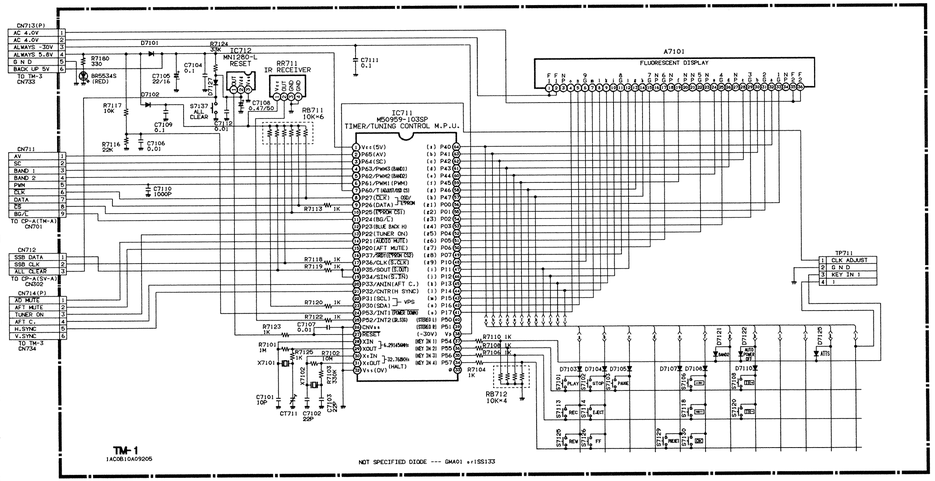

ANODE CONNECTION

	9G	8G	7G	6G	5G	4G	3G	2G	1G
a	B	●	a1	a1	a1	a1	a1	a1	ON
b	A	PROG.	b1	b1	b1	b1	b1	b1	●
c	-	SC	c1	c1	c1	c1	c1	c1	DP
d	×2	DATE	d1	d1	d1	d1	d1	d1	M(1)
e	●	●	e1	e1	e1	e1	e1	e1	AFT
f	C	DNR	f1	f1	f1	f1	f1	f1	ST
g	D	VTR	g1	g1	g1	g1	g1	g1	DU
h	-	QSR	/	\	-	-	\	\	DU
i	●	H	a2	a2	a2	a2	a2	a2	OFF
j	E	-	b2	b2	b2	b2	b2	b2	S
k	I	EP	c2	c2	c2	c2	c2	c2	-
l	H	VPS	d2	d2	d2	d2	d2	d2	H
m	J	-	e2	e2	e2	e2	e2	e2	M(2)
n	F	-	f2	f2	f2	f2	f2	f2	-
o	G	LP	g2	g2	g2	g2	g2	g2	DU

GRID ASSIGNMENT

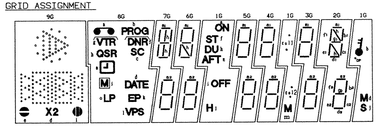

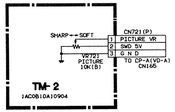

TM-1 DISPLAY, TIMER, TUNING CONTROL P.C.B.

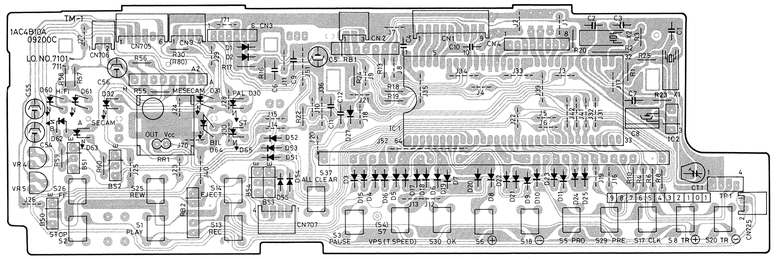

TM-2 VR P.C.B.

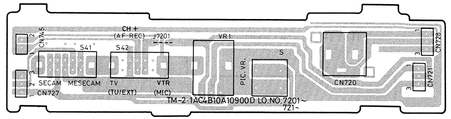

COMPL. CP-A (TM-A) TUNING SELECT CIRCUIT

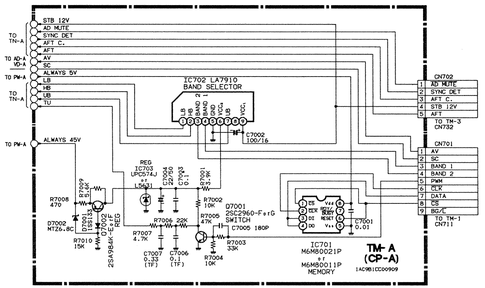

COMPL. TM-3 SYNC. SEPARATION CIRCUIT & P.C.B.

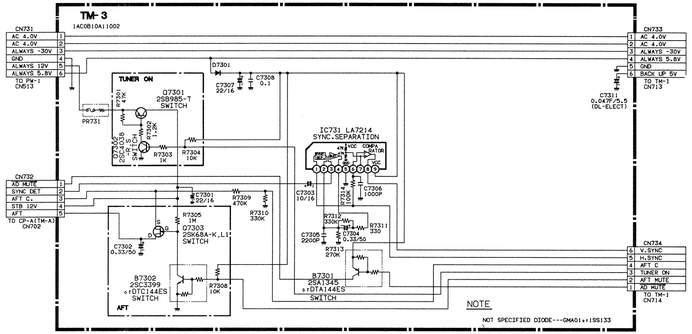

VHR-D4610E

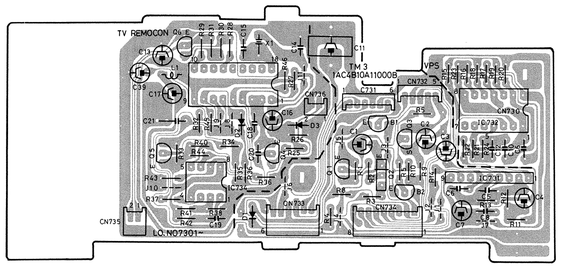

COMPL. TN-1 IF CIRCUIT & P.C.B.

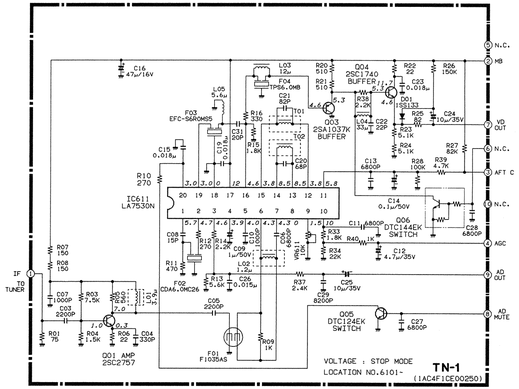

COMPL. CP-A (TN-A) TN CONNECTION CIRCUIT

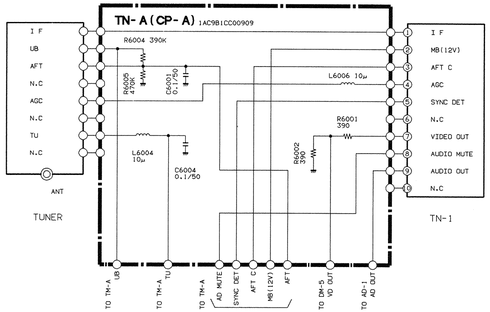

IR-4 IR RECEIVER P.C.B.

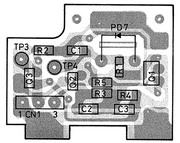

NOTE: BOTTOM SIDE FOIL
TOP SIDE FOIL

IR-3 IR SOUND P.C.B.

NOTE: BOTTOM SIDE FOIL
TOP SIDE FOIL

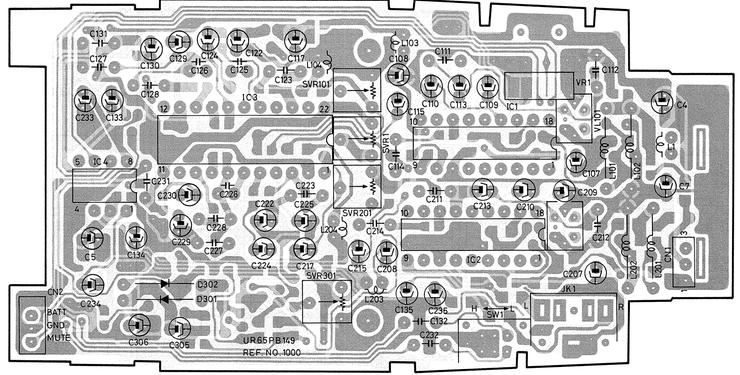

IR-1 IR SOUND REMOTE ADAPTER P.C.B.

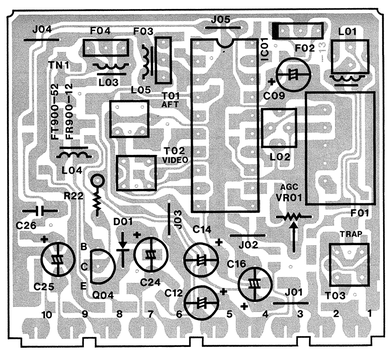

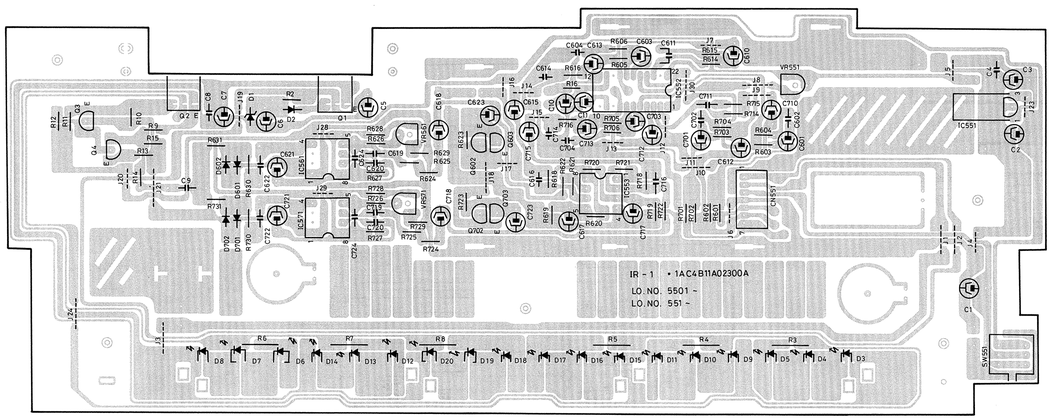

IR-3 IR SOUND P.C.B.

NOTE: BOTTOM SIDE FOIL
TOP SIDE FOIL

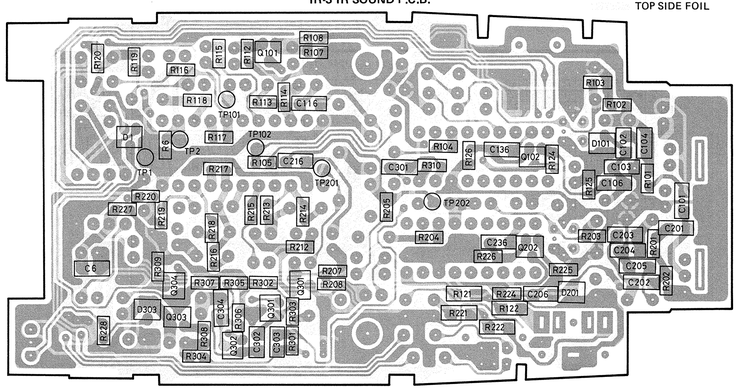

VHR-D4610E

COMPL. IR-1 IR SOUND REMOTE ADAPTER CIRCUIT

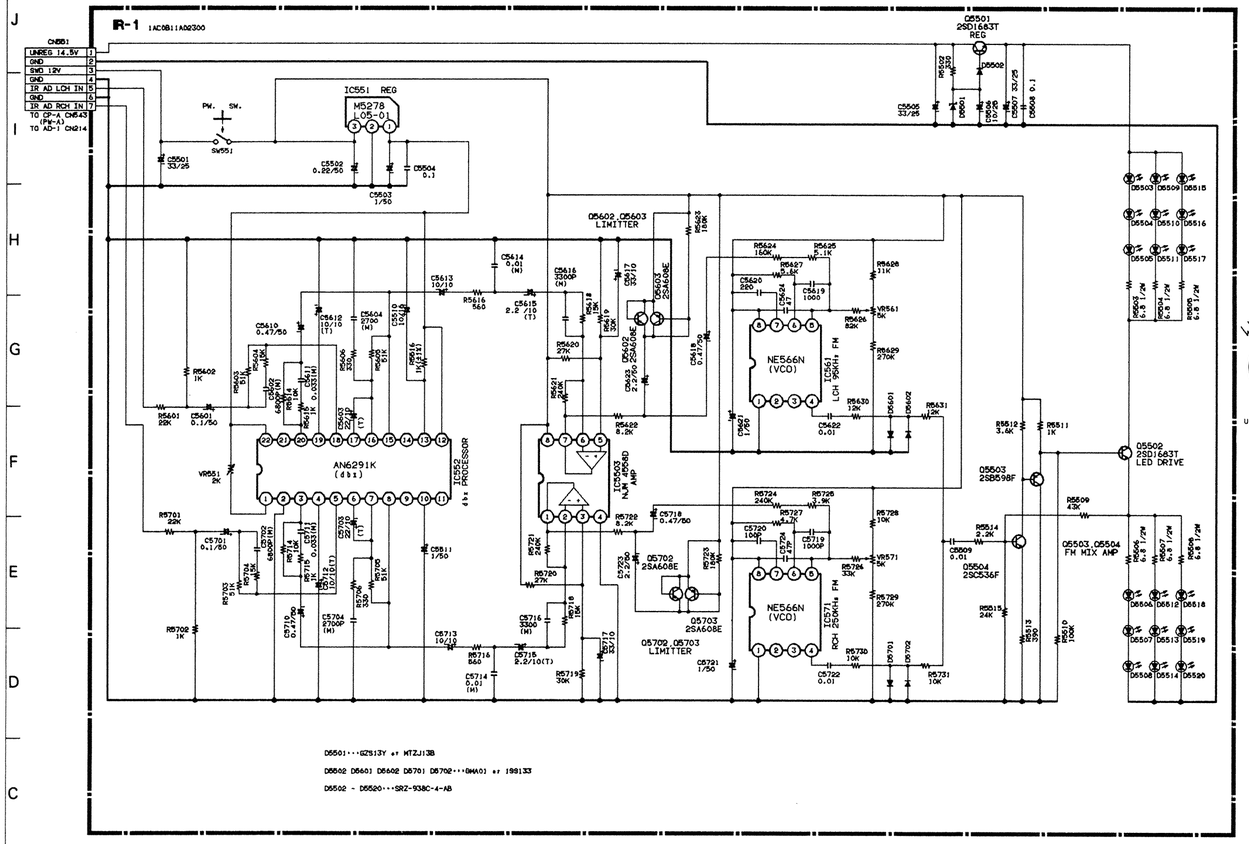

COMPL. IR-3, 4 IR SOUND RECEIVER CIRCUIT

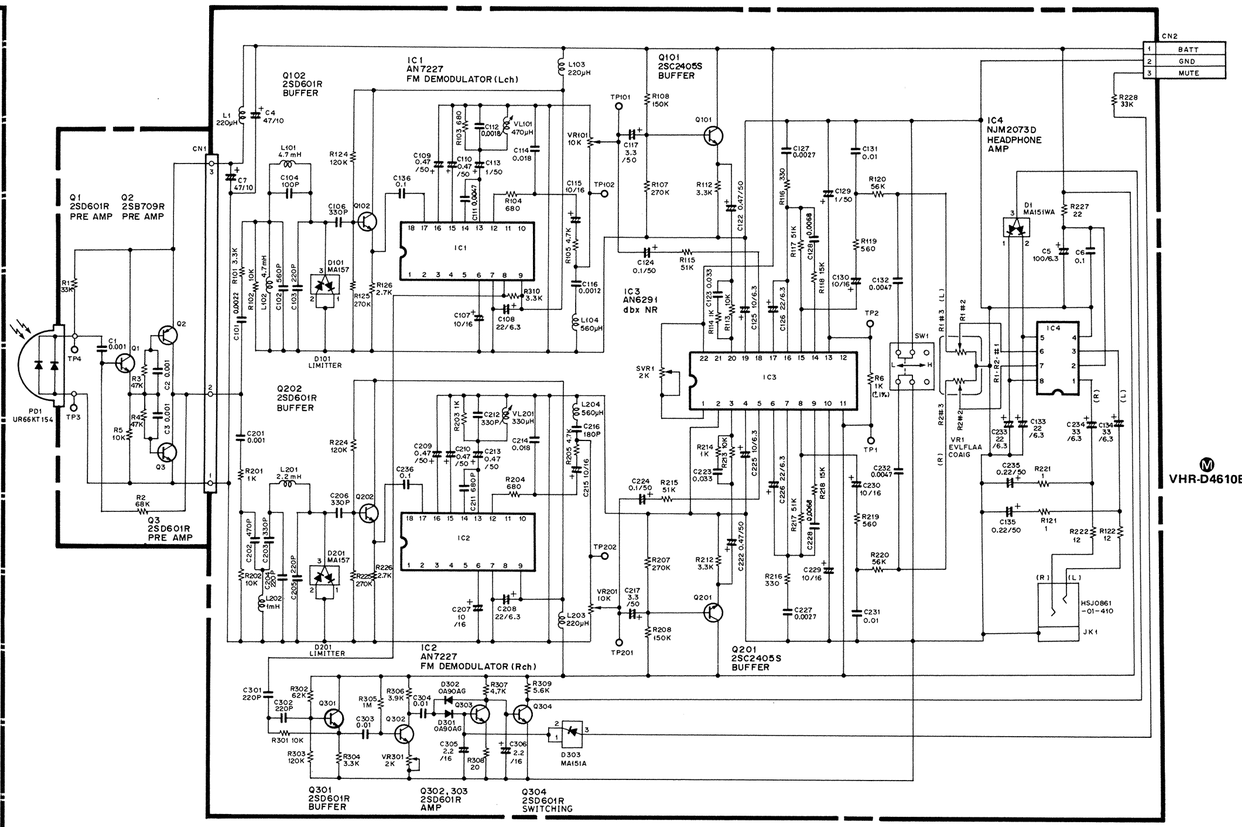

COMPL. RM-1 IR REMOTE CONTROL CIRCUIT

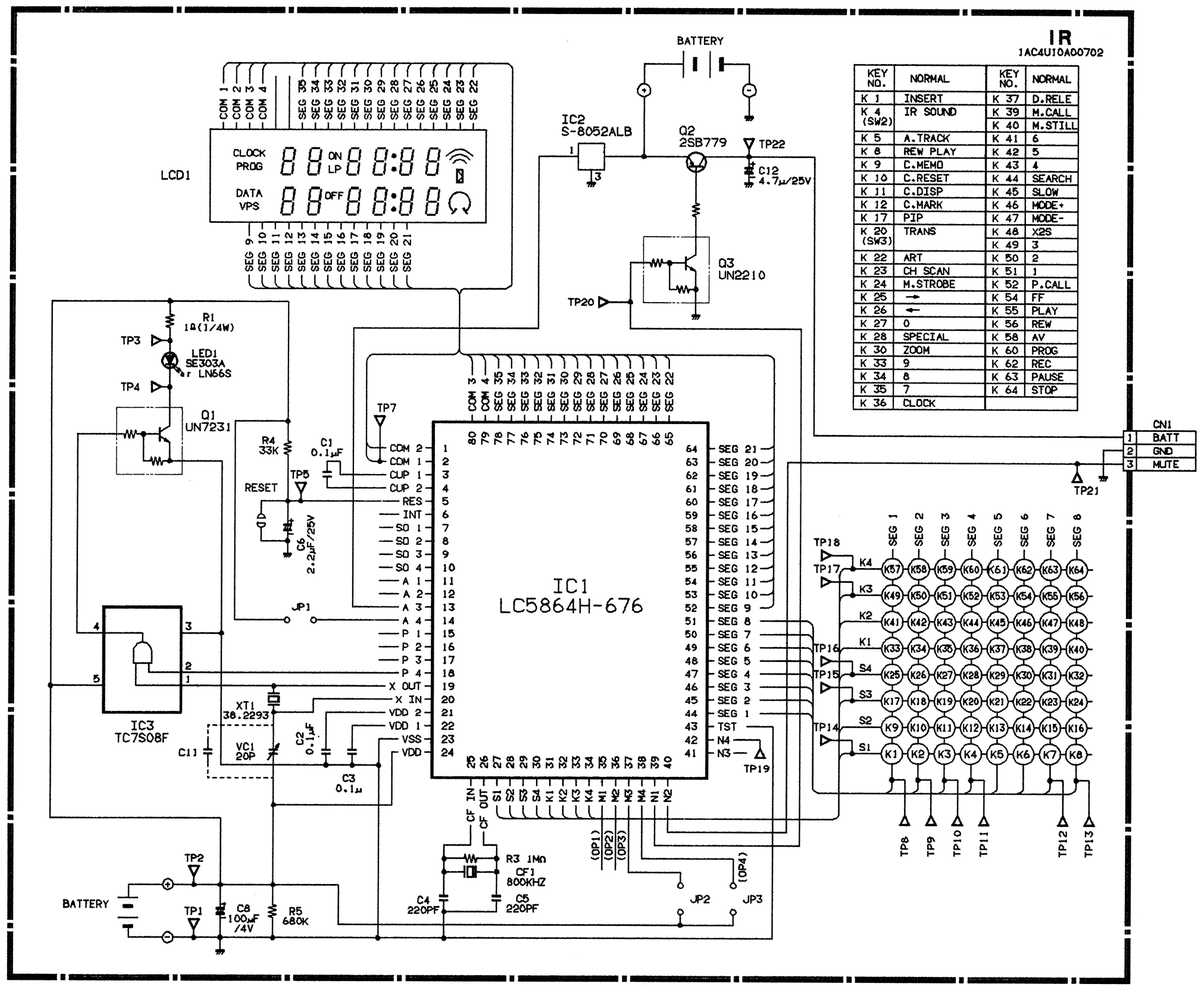

KEY NO.	NORMAL	KEY NO.	NORMAL
K 1	INSERT	K 37	D.RELE
K 4 (SW2)	IR SOUND	K 39	M.CALL
		K 40	M.STILL
K 5	A.TRACK	K 41	6
K 8	REW PLAY	K 42	5
K 9	C.MEMO	K 43	4
K 10	C.RESET	K 44	SEARCH
K 11	C.DISP	K 45	SLOW
K 12	C.MARK	K 46	MODE+
K 17	PIP	K 47	MODE-
K 20 (SW3)	TRANS	K 48	X2S
		K 49	3
K 22	ART	K 50	2
K 23	CH SCAN	K 51	1
K 24	M.STROBE	K 52	P.CALL
K 25	→	K 54	FF
K 26	←	K 55	PLAY
K 27	0	K 56	REW
K 28	SPECIAL	K 58	AV
K 30	ZOOM	K 60	PROG
K 33	9	K 62	REC
K 34	8	K 63	PAUSE
K 35	7	K 64	STOP
K 36	CLOCK		

VHR-D4610E

RM-1 IR REMOTE CONTROL CONTROL P.C.B.

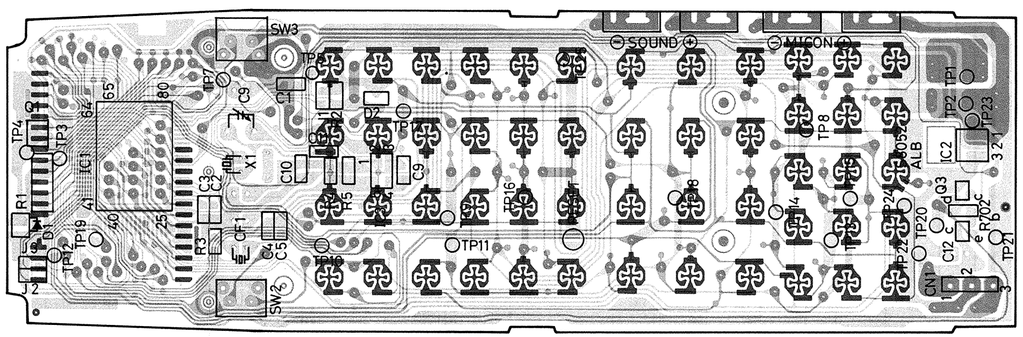

NOTE: BOTTOM SIDE FOIL
TOP SIDE FOIL